MCMURDO STATION
BL010: IT&C PRIMARY OPS FACILITY
30% SUBMITTAL

LOCATION MAP

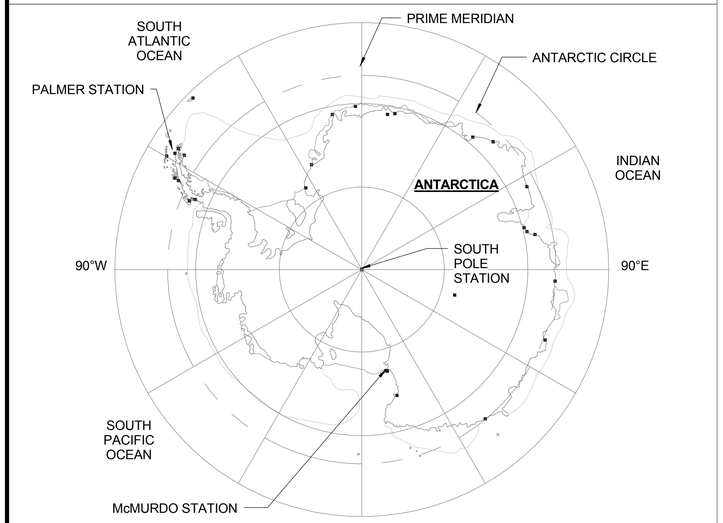

SHEET INDEX, SEE G-002

VICINITY MAP

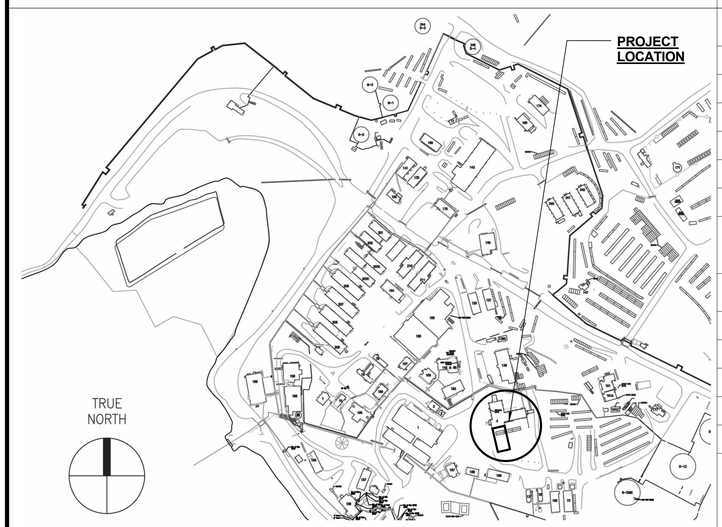

DESIGN CONSULTANT TEAM

APPROVALS	NAMES	SIGNATURES	DATE
ARCHITECT	JOSEPH FERRARO, FAIA		--/--/----
STRUCTURAL ENGINEER	DENNIS BERRY, PE		--/--/----
MECHANICAL ENGINEER	CRAIG FREDEEN, PE		--/--/----
ELECTRICAL ENGINEER	ROBERT POSMA, PE		--/--/----
FIRE PROTECTION ENGINEER	DANNY RAUCHENSTEIN, PE		--/--/----
IT ENGINEER	LANCE MACKIE		--/--/----

ASC ENGINEERING REVIEW

APPROVALS	NAMES	SIGNATURES	DATE
ARCHITECT	JAMES HILDEN		--/--/----
EGINEERING MANAGER	----		--/--/----
IT OPERATIONS	KEVIN GIBBONS		--/--/----
PROJECT MANAGER	NATHAN HOOPLE		--/--/----
PROJECT OPERATIONS	JOE HARRIGAN		--/--/----

OWNER

NATIONAL SCIENCE FOUNDATION
OFFICE OF POLAR PROGRAMS
WASHINGTON, D.C.

PROJECT INFORMATION

STANDARD CODE REFERENCES:
2015 ICC INTERNATIONAL BUILDING CODE ® (IBC)
2015 ICC INTERNATIONAL MECHANICAL CODE ® (IMC)
2014 NFPA 70 - NATIONAL ELECTRIC CODE ® (NEC 2011)
2015 NATIONAL ELECTRICAL SAFETY CODE ® (NESC) IEE C2-2015
2015 INTERNATIONAL FIRE CODE
2015 INTERNATIONAL PLUMBING CODE
2015 NFPA 101 - LIFE SAFETY CODE
2013 NFPA 72 - FIRE ALARM AND SIGNALING CODE

PRELIMINARY DRAWING
FOR REVIEW ONLY - NOT FOR CONSTRUCTION

INCHES 1 2
CENTIMETERS 1 2 3 4 5 6

NATIONAL SCIENCE FOUNDATION
OFFICE OF POLAR PROGRAMS
WASHINGTON, D.C. NSF
CONTRACT OPP. 0000373

REVISION LOG

REV.	DATE	DESCRIPTION	DFTG.	APPD.
A	09/23/2016	30% DESIGN SUBMITTAL	DFTG.	APPD.

MCMURDO STATION
BL010: IT&C PRIMARY OPS FACILITY
GENERAL

7400 South Tucson Way
Centennial, Colorado
80112 - 3938 USA
303 - 790 - 8606
800 - 688 - 8606
ASC ANTARCTIC SUPPORT CONTRACT

PROJECT NUMBER: 160604MCM010
FILE NAME: 160604MCM010G-001-RA
DESIGNED BY: JF
DRAWN BY: JC, RB
DATE CHECKED: 9/23/16
SHEET TITLE: TITLE SHEET, LOCATION MAP, PROJECT INFORMATION
SHEET NUMBER: G-001

1 2 3 4 5 6 7 8
D C B A

DRAWING INDEX

DRAWING INDEX	
SHEET NUMBER	SHEET NAME
GENERAL	
G-001	TITLE SHEET
G-002	DRAWING INDEX
G-003	ABBREVIATIONS & LEGENDS
G-004	BUILDING CODE
G-005	FIRE AND LIFE SAFETY
G-006	FIRE AND LIFE SAFETY
ARCHITECTURE	
A-311	WALL SECTIONS
A-312	WALL SECTIONS
AD-111	FIRST FLOOR PLAN DEMO
AD-112	SECOND FLOOR PLAN DEMO
AD-121	FIRST FLOOR REFLECTED CEILING PLAN - DEMO
AD-122	SECOND FLOOR RELFECTED CEILING PLAN - DEMO
A-000	SITE PLAN
A-101	FIRST FLOOR PLAN, OVERALL
A-102	SECOND FLOOR PLAN, OVERALL
A-111	FIRST FLOOR PLAN - EXISTING BUILDING
A-112	FIRST FLOOR PLAN - DATA CENTER
A-113	SECOND FLOOR PLAN - EXISTING BUIDING
A-114	SECOND FLOOR PLAN - DATA CENTER
A-121	FIRST FLOOR REFLECTED CEILING PLAN - EXISTING BUILDING
A-122	FIRST FLOOR REFLECTED CEILING PLAN - DATA CENTER
A-123	SECOND FLOOR REFLECTED CEILING PLAN - EXISTING BUILDING
A-124	SECOND FLOOR REFLECTED CEILING PLAN - DATA CENTER
A-131	ROOF PLAN
A-201	EXTERIOR ELEVATIONS
A-202	EXTERIOR ELEVATIONS
A-203	EXTERIOR ELEVATIONS
A-301	BUILDING SECTIONS
A-302	BUILDING SECTIONS
A-601	DOOR SCHEDULE, DOOR TYPES
A-602	ROOM FINISH SCHEDULE, FINISH LEGEND
STRUCTURAL	
S-001	GENERAL NOTES AND ABBREVIATIONS
SD-108	FOUNDATION PLAN EXISTING BUILDING DEMO
SD-109	FOUNDATION PLAN DATA CENTER DEMO
SD-110	1ST FLOOR FRAMING PLAN AREA A, B - DEMO
SD-111	1ST FLOOR FRAMING PLAN DATA CENTER DEMO
SD-112	2ND FLOOR FRAMING EXISTING BUILDING DEMO
SD-113	2ND FLOOR FRAMING PLAN DATA CENTER DEMO
SD-114	ROOF FRAMING PLAN EXISTING BUILDING DEMO
SD-115	ROOF FRAMING PLAN DATA CENTER - DEMO
S-108	FOUNDATION PLAN EXISTING BUILDING
S-109	FOUNDATION PLAN DATA CENTER
S-110	1ST FLOOR FRAMING PLAN AREA A, B
S-111	1ST FLOOR FRAMING PLAN DATA CENTER
S-112	2ND FLOOR FRAMING EXISTING BUILDING
S-113	2ND FLOOR FRAMING PLAN DATA CENTER
S-114	ROOF FRAMING PLAN EXISTING BUILDING
S-115	ROOF FRAMING PLAN DATA CENTER
S-201	BRACE ELEVATIONS
S-501	DETAILS
S-502	DETAILS
S-503	DETAILS
S-601	SCHEDULES

DRAWING INDEX	
SHEET NUMBER	SHEET NAME
MECHANICAL	
M-001	MECHANICAL SYMBOL LEGEND AND ABBREVIATIONS
MD-122	LEVEL 1 - B010 - DEMOLITION - HYDRONIC
MD-124	LEVEL 2 - B010 - DEMOLITION - HYDRONIC
MD-132	LEVEL 1 - B010 - DEMOLITION - VENTILATION
MD-134	LEVEL 2 - B010 - DEMOLITION - VENTILATION
MD-141	MEZZANINE - B010 - DEMOLITION - MECHANICAL
MD-401	LEVEL 1 - LARGE SCALE DEMOLATION MECHANICAL PLAN - MECH ROOM 115
M-101	LEVEL 1 - MECHANICAL OVERALL PLAN
M-102	LEVEL 2 - MECHANICAL OVERALL PLAN
M-121	LEVEL 1 - DATA CENTER - HYDRONIC
M-122	LEVEL 1 - B010 - RENOVATION - HYDRONIC
M-123	LEVEL 2 - DATA CENTER - HYDRONIC
M-124	LEVEL 2 - B010 - RENOVATION - HYDRONIC
M-131	LEVEL 1 - DATA CENTER - VENTILATION
M-132	LEVEL 1 - B010 - RENOVATION - VENTILATION
M-133	LEVEL 2 - DATA CENTER - VENTILATION
M-134	LEVEL 2 - B010 - RENOVATION - VENTILATION
M-141	MEZZANINE - B010 - MECHANICAL
M-401	LEVEL 1 - B010 - MECH ROOM 115 - RENOVATION
M-521	VENTILATION DETAILS
M-601	MECHANICAL SCHEDULES
M-602	MECHANICAL SCHEDULES
M-611	HYDRONIC SYSTEM DIAGRAM - LCCA OPTION 1
M-612	HYDRONIC SYSTEM DIAGRAM - LCCA OPTION 2
M-613	HYDRONIC SYSTEM DIAGRAM - LCCA OPTION 3
M-614	HYDRONIC BOILER DIAGRAM
M-615	HYDRONIC DIAGRAMS
M-621	VENTILATION DIAGRAMS
M-631	MICROTURBINE DIAGRAMS
M-641	FUEL OIL SYSTEM DIAGRAM
PLUMBING	
P-001	PLUMBING SYMBOL LEGEND AND ABBREVIATIONS
PD-111	LEVEL 1 - BL010 - DEMOLITION - PLUMBING
PD-112	LEVEL 2 - B010 - DEMOLITION - PLUMBING
PD-113	MEZZANINE - B010 - DEMOLITION - PLUMBING
P-102	LEVEL 1 - PLUMBING OVERALL PLAN
P-103	LEVEL 2 - PLUMBING OVERALL PLAN
P-112	LEVEL 1 - DATA CENTER - PLUMBING
P-113	LEVEL 1 - B010 - RENOVATION - PLUMBING
P-114	LEVEL 2 - DATA CENTER - PLUMBING
P-115	LEVEL 2 - B010 - RENOVATION - PLUMBING
P-601	PLUMBING SCHEDULES
P-611	WATER TREATMENT AND HUMIDIFCATION DIAGRAM
FIRE PROTECTION	
F-001	FIRE PROTECTION SYMBOL LEGEND AND ABBREVIATIONS
F-601	FIRE PROTECTION DETAILS

DRAWING INDEX	
SHEET NUMBER	SHEET NAME
ELECTRICAL	
E-001	LEGEND
E-002	LEGEND
E-003	LEGEND
E-004	GENERAL NOTES
E-005	ABBREVIATIONS
E-006	FIXTURE SCHEDULE
E-007	TRANSFORMER AND FEEDER / BRANCH CIRCUIT SCHEDULE
E-008	MECHANICAL EQUIPMENT CONNECTION SCHEDULE
ED-121	LEVEL 1 - B010 - DEMOLITION - LIGHTING
ED-122	LEVEL 2 - B010 - DEMOLITION - LIGHTING
ED-131	LEVEL 1 - B010 - DEMOLITION - POWER
ED-132	LEVEL 2 - B010 - DEMOLITION - POWER
ED-141	MEZZANINE - B010 - DEMOLITION - ELECTRICAL
E-101	LEVEL 1 - ELECTRICAL OVERALL PLAN
E-102	LEVEL 2 - ELECTRICAL OVERALL PLAN
E-121	LEVEL 1 - DATA CENTER - LIGHTING
E-122	LEVEL 1 - B010 - RENOVATION - LIGHTING
E-123	LEVEL 2 - DATA CENTER - LIGHTING
E-124	LEVEL 2 - B010 - RENOVATION - LIGHTING
E-131	LEVEL 1 - DATA CENTER - POWER
E-132	LEVEL 1 - B010 - RENOVATION - POWER
E-133	LEVEL 2 - DATA CENTER - POWER
E-136	LEVEL 2 - B010 - RENOVATION - POWER
E-141	MEZZANINE - B010 - ELECTRICAL
E-401	ELECTRICAL LARGE SCALE PLANS - PHASE 1
E-402	ELECTRICAL LARGE SCALE PLANS - PHASE 1
E-403	ELECTRICAL LARGE SCALE PLANS - PHASE 1
E-404	ELECTRICAL LARGE SCALE PLANS - PHASE 1
E-405	ELECTRICAL LARGE SCALE PLANS - PHASE 2
E-501	DETAILS
E-601	BLD010 POWER SINGLE-LINE DIAGRAM - 480V SERVICE B
E-602	BLD010 POWER SINGLE-LINE DIAGRAM - 208V SERVICE A
TELECOMMUNICATION	
T-000	LEGEND
T-001	GENERAL NOTES
T-002	ABBREVIATIONS
T-101	LEVEL 1 - TELECOM OVERALL PLAN
T-102	LEVEL 2 - TELECOM OVERALL PLAN
T-111	LEVEL 1 - TELECOM PLAN - AREA A & B
T-112	LEVEL 1 - TELECOM PLAN - AREA C
T-113	LEVEL 2 - TELECOM PLAN - AREA A & B
T-114	LEVEL 2 - TELECOM PLAN - AREA C
T-200	TELECOM RISER DIAGRAM
T-401	ENLARGED TELECOM PLANS
T-402	ENLARGED TELECOM PLANS
T-501	TELECOM DETAILS
T-502	TELECOM DETAILS
T-503	TELECOM DETAILS
T-504	TELECOM DETAILS
T-505	TELECOM DETAILS
T-506	TELECOM DETAILS'

PRELIMINARY DRAWING
FOR REVIEW ONLY - NOT FOR CONSTRUCTION

INCHES 1 2
CENTIMETERS 1 2 3 4 5 6

NATIONAL SCIENCE FOUNDATION
OFFICE OF POLAR PROGRAMS
WASHINGTON, D.C. NSF
CONTRACT OPP. 0000373

REVISION LOG

REV.	DATE	DESCRIPTION	DFTG.	APPD.
A	09/23/2016	30% DESIGN SUBMITTAL	DFTG.	APPD.

MCMURDO STATION
BL010: IT&C PRIMARY OPS FACILITY
GENERAL

7400 South Tucson Way
Centennial, Colorado
80112 - 3938 USA
303 - 790 - 8606
800 - 688 - 8606
ASC ANTARCTIC SUPPORT CONTRACT

PROJECT NUMBER: 160604MCM010
FILE NAME: 160604MCM010G-002-RA
DESIGNED BY: JF
DRAWN BY: JC, RB
DATE CHECKED: 9/23/16
SHEET TITLE: DRAWING INDEX
SHEET NUMBER: G-002

1 2 3 4 5 6 7 8
D C B A

ARCHITECTURAL ABBREVIATIONS

@	AT
ø	DIAMETER
°	DEGREE
℄	CENTERLINE
AC-(#)	ACOUSTICAL TILE - TYPE
ACP	ALUMINUM CHECKER PLATE
ADA	AMERICANS WITH DISABILITIES ACT
AF-(#)	ACCESS FLOOR - TYPE
AFF	ABOVE FINISH FLOOR
ALUM	ALUMINUM
AMHS	AUTOMATED MATERIAL HANDLING SYSTEM
AM&M	ALTERNATE MATERIALS AND METHODS
ANSI	AMERICAN NATIONAL STANDARDS INSTITUTE
APPROX	APPROXIMATE
ARCH	ARCHITECTURAL
ASCE	AMERICAN SOCIETY OF CIVIL ENGINEERS
ASME	AMERICAN SOCIETY OF MECHANICAL ENGINEERS
ASTM	AMERICAN SOCIETY FOR TESTING AND MATERIALS
AWT	ACOUSTICAL WALL TREATMENT
B/	BOTTOM OF
BD	BOARD
BLDG	BUILDING
BLKG	BLOCKING
BM	BEAM
BOS	BOTTOM OF STEEL
CF	CUBIC FEET
CFM	CUBIC FEET PER MINUTE
CG-(#)	CORNER GUARD - TYPE
CHK	CHECKERED
CI	CODE INTERPRETATION
CIP	CAST-IN-PLACE
CJ	CONTROL JOINT
CLF	CHAIN LINK FENCE
CLG	CEILING
CLR	CLEAR
CMU	CONCRETE MASONRY UNIT
COL	COLUMN
CONC	CONCRETE
CONF	CONFERENCE
CONT	CONTINUOUS
COORD	COORDINATE
CPT-(#)	CARPET - TYPE
CR	CARD READER
CR-(#)	CRASH RAIL - TYPE
CRC	CHEMICAL RESISTANT COATING
CS	CONCRETE SEALER
CT-(#)	CERAMIC TILE - TYPE
CTR	CENTER
CWS-(#)	CLEAN ROOM WALL SYSTEM - TYPE
DAC	INTERBAY AMHS
DAT	DATUM
DF	DRINKING FOUNTAIN
DIA	DIAMETER
DIM	DIMENSION
DN	DOWN
DO	DOOR OPENING
DR	DOOR
DRB	DESIGN REVISION BULLETIN
DS	DOWNSPOUT
DTL	DETAIL
DWG	DRAWING
DW	DUMBWAITER
DWP	DEMOUNTABLE WALL PARTITION
(E)	EXISTING
EA	EACH
EIFS	EXTERIOR INSULATION FINISH SYSTEM
EJ-(#)	EXPANSION JOINT - TYPE
ELEC	ELECTRIC
EL/ELEV	ELEVATION OR ELEVATOR
EM(#)	ENTRANCE MAT - TYPE
EMERG	EMERGENCY
EOD	EDGE OF DECK
EQ	EQUAL
EQUIP	EQUIPMENT
EXP	EXPOSED
EXT	EXTERIOR
FACT	FACTORY
FE-(#)	FIRE EXTINGUISHER - TYPE
FF	FINISH FLOOR
FF&E	FURNITURE, FIXTURES AND EQUIPMENT
FFU	FAN FILTER UNIT
FG	FINISH GRADE
FIN	FINISH
FLG	FLASHING
FLR	FLOOR
FM	FACTORY MUTUAL
FMS	FACILITIES MANAGEMENT SYSTEM
FO	FACE OF
FOC	FACE OF CONCRETE
FOF	FACE OF FINISH
FOM	FACE OF MASONRY
FOP	FACE OF PANEL
FOS	FACE OF STUDS / STEEL
FOUP	FRONT OPENING UNIFIED POD
FRP-(#)	FIBERGLASS REINFORCED PLASTIC - TYPE
FT	FOOT/FEET
FWP-(#)	FABRIC WRAPPED PANEL - TYPE
GA	GAUGE
GALV	GALVANIZED
GB	GRAB BAR
GB	GYPSUM BOARD
GL-(#)	GLASS - TYPE
GPM	GALLONS PER MINUTE
GR	GRILLE
GT-(#)	GROUT - TYPE
GYP	GYPSUM
HB	HOSE BIBB
HC	HOLLOW CORE
HDBD	HARDBOARD
HDWR	HARDWARE
HM	HOLLOW METAL
HORIZ	HORIZONTAL
HP	HIGH POINT
HPC	HIGH PERFORMANCE COATING
HR	HOUR
HS	HIGH STRENGTH
HT	HEIGHT
IBC	INTERNATIONAL BUILDING CODE
ICR	INFORMAL CONFERENCE ROOM
IECC	INTERNATIONAL ENERGY CONSERVATION CODE
IFC	INTERNATIONAL FIRE CODE
IGU	INSULATED GLASS UNIT
IMC	INTERNATIONAL MECHANICAL CODE
IN	INCH/INCHES
INSUL	INSULATION
INT	INTERIOR
IPC	INTERNATIONAL PLUMBING CODE
IWUIC	INTERNATIONAL WILDLANDS URBAN INTERFACE CODE
JT	JOINT
KEC	KITCHEN EQUIPMENT CONSULTANT
LAM	LAMINATED
LB	LOUVERED BLINDS / POUND
LP	LOW POINT
LSS	LIFE SAFETY SYSTEMS
MAQ	MAXIMUM ALLOWABLE QUANTITIES
MAS	MASONRY
MATL	MATERIAL
MAX	MAXIMUM
MB-(#)	MARKER BOARD - TYPE
MECH	MECHANICAL
MEZZ	MEZZANINE
MFR	MANUFACTURER
MIN	MINIMUM; MINUTE
MIR	MIRROR
MISC	MISCELLANEOUS
MO	MASONRY OPENING
MOU	MEMORANDUM OF UNDERSTANDING
MS	MOP SINK
MT	MARKET TRAY
MTL	METAL
NA	NOT APPLICABLE
ND	NAPKIN DISPOSAL
NEC	NATIONAL ELECTRIC CODE
NFPA	NATIONAL FIRE PROTECTION ASSOCIATION
NIC	NOT IN CONTRACT
NR	NOT FIRE RATED
NTS	NOT TO SCALE
NV	NAPKIN VENDOR
OC	ON CENTER
OFCI	OWNER FURNISHED, CONTRACTOR INSTALLED
OFOI	OWNER FURNISHED, OWNER INSTALLED
OHC	OVERHEAD COILING DOOR
OPP	OPPOSITE
OSHA	OCCUPATIONAL SAFETY AND HEALTH ASSOCIATION
PC-(#)	POLYMER COMPOSITE
PCF	PER CUBIC FOOT
PGV	PERSONAL GUIDED VEHICLE
PKG	PACKAGE
PL	PLATE
PLAM - (#)	PLASTIC LAMINATE - TYPE
PLBG	PLUMBING
PLYWD	PLYWOOD
PNL	PANEL
PR	PAIR
PREFAB	PREFABRICATED
PROC	PROCESS
PSI	POUNDS PER SQUARE INCH
P / T	PASS THROUGH
PT - (#)	PAINT SYSTEM - COLOR
PTD	PAPER TOWEL DISPENSER
R	RISER
RA	RETURN AIR
RAG	RETURN AIR GRILLE
RB-(#)	RESILIENT BASE - TYPE
RD	ROOF DRAIN
REF	REFERENCE
REQD	REQUIRED
RF - (#)	RESILIENT FLOORING - TYPE
RM	ROOM
RO	ROUGH OPENING
ROC	REMOTE OPERATIONS CENTER
RODI	REVERSE OSMOSIS DE-IONIZED WATER
ROM	ROUGH ORDER OF MAGNITUDE
RRD	RAPID ROLL-UP DOOR
RS - (#)	REDUCER STRIP - TYPE
S	STAIN
SAC-(#)	SUSPENDED ACOUSTICAL CEILING - TYPE
SAT	SUSPENDED ACOUSTICAL TILE
SCD	SEAT COVER DISPENSER
SCR	SATELLITE COMMUNICATIONS ROOM
SD	SOAP DISPENSER
SECT	SECTION
SF	SQUARE FEET
S/H	SEALER / HARDENER
SHT	SHEET
SIB	STRUCTURAL ISOLATION BREAK
SIM	SIMILAR
S-INSUL	STEEL INSULATED
SOW	SCOPE OF WORK
SS	STAINLESS STEEL
STC	SOUND TRANSMISSION COEFFICIENT
STD	STANDARD
STL	STEEL
STRUCT	STRUCTURAL
SUSP	SUSPENDED
TBD	TO BE DETERMINED
TEMP	TEMPERED
TEMP.	TEMPORARY
THR	THRESHOLD
TLA	THREE LETTER ACRONYM
TOC	TOP OF CONCRETE
TOS	TOP OF STEEL
TR	TREAD
TS	TUBE STEEL
TYP	TYPICAL
UA	UNASSIGNED
UL	UNDERWRITERS LABORATORY
UMC	UNIFORM MECHANICAL CODE
UNO	UNLESS NOTED OTHERWISE
UPC	UNIFORM PLUMBING CODE
V	VENT
VDB-(#)	VISUAL DISPLAY BOARD - TYPE
VERT	VERTICAL
VEST	VESTIBULE
VIB	VIBRATION
VP	VENT PIPE
VR	VAPOR RETARDER
W/	WITH
WB-(#)	WHITE BOARD - TYPE
WC-(#)	WALLCOVERING - TYPE
WD	WOOD
WF-(#)	WINDOW FILM - TYPE
WM	WIRE MESH
W/O	WITHOUT
WP-(#)	DEMOUNTABLE PARTITION - TYPE
WT	WEIGHT
WWP	WOVEN WIRE PARTITION
WWT	WASTE WATER TREATMENT

MATERIAL LEGEND

EARTHWORKS
- EARTH
- GRAVEL

CONCRETE
- CONCRETE
- SAND

MASONRY
- BRICK OR CMU

METAL
- ALUMINUM
- STEEL

WOOD
- FINISH
- ROUGH
- BLOCKING
- PLYWOOD

INSULATION
- BATT/LOOSE FILL
- RIGID

FINISHES
- ACOUSTICAL TILE
- CARPET
- GYPSUM BOARD

ELEVATION INDICATIONS
- BRICK
- TILE
- GLASS

PLAN INDICATIONS
- CHECKER PLATE
- GRATE

SYMBOLS

- COLUMN GRID BUBBLE
- EXISTING COLUMN GRID BUBBLE
- DETAIL CALLOUT (1 / DX3A-7600)
- BUILDING SECTION CALLOUT (1 / DX3A-7600)
- WALL SECTION CALLOUT (1 / DX3A-7600)
- ELEVATION CALLOUT (1 / DX3A-7600)
- INTERIOR ELEVATION CALLOUT (X Ref / XX)
- REVISION TRIANGLE (RFI-0000 / 1)
- KEYED NOTE
- ELEVATION DATUM
- SIGNAGE CALLOUT (Sign No.)

TAGS

ROOM TAG (Room name: BLS201)
- ROOM NUMBER
- BUILDING SECTOR (WHERE REQUIRED)
- BUILDING SECONDARY LEVEL (WHERE REQUIRED)
- BUILDING FLOOR LEVEL
- BUILDING (WHERE REQUIRED)

ROOM OCCUPANCY TAG (Room name; ## | SQ FT; OCC | OLF | OL)
- ROOM NUMBER
- ROOM SQ FOOTAGE
- OCCUPANT LOAD
- OCCUPANT LOAD FACTOR
- OCCUPANCY

DOOR TAG (BLS01A)
- DOOR NUMBER
- ROOM NUMBER
- BUILDING SECTOR (WHERE REQUIRED)
- BUILDING LEVEL (WHERE REQUIRED)
- BUILDING (WHERE REQUIRED)

WALL TAG (AE 2 / 2 D)
- PARTITION TYPE
- STUD OR CMU NOMINAL SIZE
- SPECIAL CONDITION IF REQUIRED
- PARTITION CONSTRUCTION CONDITION

GLAZING TAG (8X)
- FIRE RESISTANCE RATING SEE WINDOW SCHEDULE
- SIZE/TYPE SEE WINDOW SCHEDULE

PRELIMINARY DRAWING
FOR REVIEW ONLY - NOT FOR CONSTRUCTION

INCHES 1 2 / CENTIMETERS 1 2 3 4 5 6

NATIONAL SCIENCE FOUNDATION
OFFICE OF POLAR PROGRAMS
WASHINGTON, D.C. NSF
CONTRACT OPP. 0000373

REVISION LOG

REV.	DATE	DESCRIPTION	DFTG.	APPD.
A	09/23/2016	30% DESIGN SUBMITTAL	DFTG.	APPD.

MCMURDO STATION
BL010: IT&C PRIMARY OPS FACILITY
GENERAL

7400 South Tucson Way
Centennial, Colorado
80112 - 3938 USA
303 - 790 - 8606
800 - 688 - 8606
ASC ANTARCTIC SUPPORT CONTRACT

PROJECT NUMBER: 160604MCM010
FILE NAME: 160604MCM010G-003-RA
DESIGNED BY: JF
DRAWN BY: JC, RB
DATE CHECKED: 9/23/16
SHEET TITLE: ABBREVIATIONS, MATERIAL LEGEND, SYMBOLS AND TAGS
SHEET NUMBER: G-003

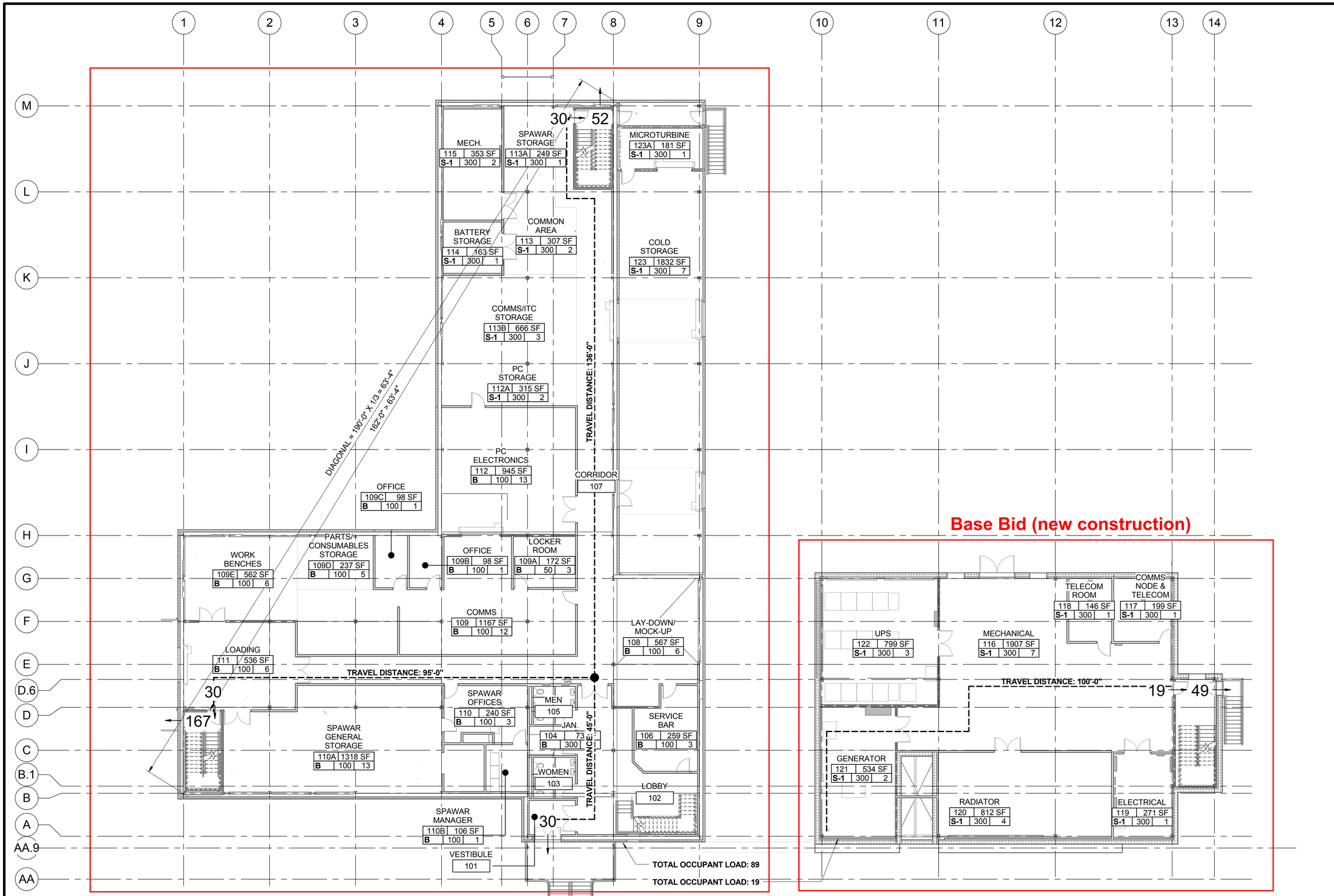

1 FIRE AND SAFETY - LEVEL 1 OVERALL FLOOR PLAN

3/32" = 1'-0"

Scale: 3/32 INCH = 1 FOOT

PRELIMINARY DRAWING
FOR REVIEW ONLY - NOT FOR CONSTRUCTION

INCHES 1 2
CENTIMETERS 1 2 3 4 5 6

NATIONAL SCIENCE FOUNDATION
OFFICE OF POLAR PROGRAMS
WASHINGTON, D.C. NSF
CONTRACT OPP. 0000373

REVISION LOG

REV.	DATE	DESCRIPTION	DFTG.	APPD.
A	09/23/2016	30% DESIGN SUBMITTAL	DFTG.	APPD.

MCMURDO STATION
BL010: IT&C PRIMARY OPS FACILITY
GENERAL

7400 South Tucson Way
Centennial, Colorado
80112 - 3938 USA
303 - 790 - 8606
800 - 688 - 8606

ASC ANTARCTIC SUPPORT CONTRACT

PROJECT NUMBER: 160604MCM010
FILE NAME: 160604MCM010G-005-RA
DESIGNED BY: JF
DRAWN BY: JC, RB
DATE CHECKED: 9/23/16
SHEET TITLE: FIRE AND LIFE SAFETY LEVEL 1
SHEET NUMBER: G-005

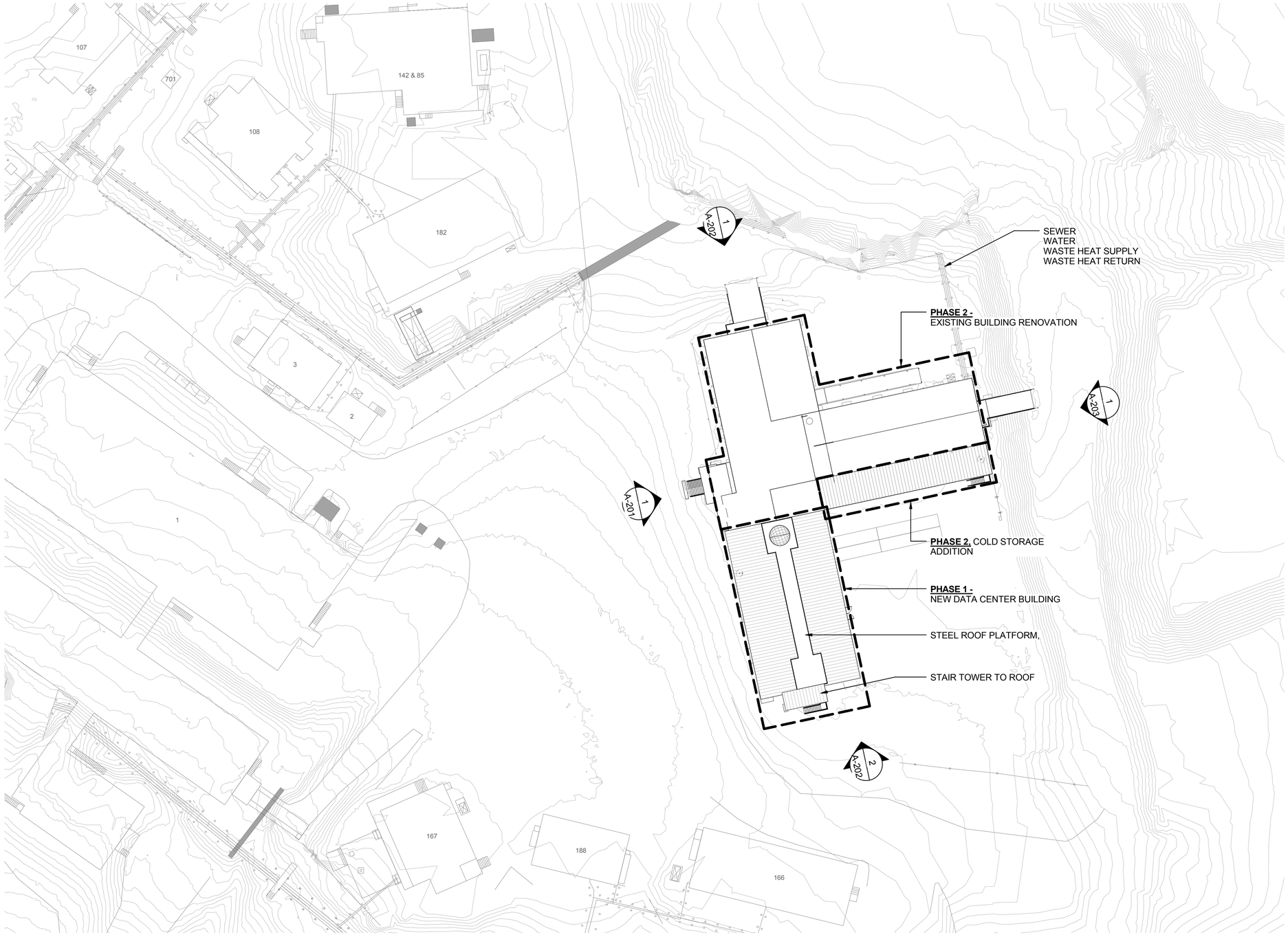

1 - **SITE PLAN**
1 : 400

N

PRELIMINARY DRAWING
FOR REVIEW ONLY - NOT FOR CONSTRUCTION

INCHES 1 2
CENTIMETERS 1 2 3 4 5 6

NATIONAL SCIENCE FOUNDATION
OFFICE OF POLAR PROGRAMS
WASHINGTON, D.C. NSF
CONTRACT OPP. 0000373

REVISION LOG

REV.	DATE	DESCRIPTION	DFTG.	APPD.
			DFTG.	APPD.
A	09/23/2016	30% DESIGN SUBMITTAL		

MCMURDO STATION
BL010: IT&C PRIMARY OPS FACILITY
ARCHITECTURE

7400 South Tucson Way
Centennial, Colorado
80112 - 3938 USA
303 - 790 - 8606
800 - 688 - 8606
ASC ANTARCTIC SUPPORT CONTRACT

PROJECT NUMBER: 160604MCM010
FILE NAME: 160604MCM010A-000-RA
DESIGNED BY: JF
DRAWN BY: JC, RB
DATE CHECKED: 9/23/16
SHEET TITLE: SITE PLAN
SHEET NUMBER: A-000

1 2 3 4 5 6 7 8
D C B A

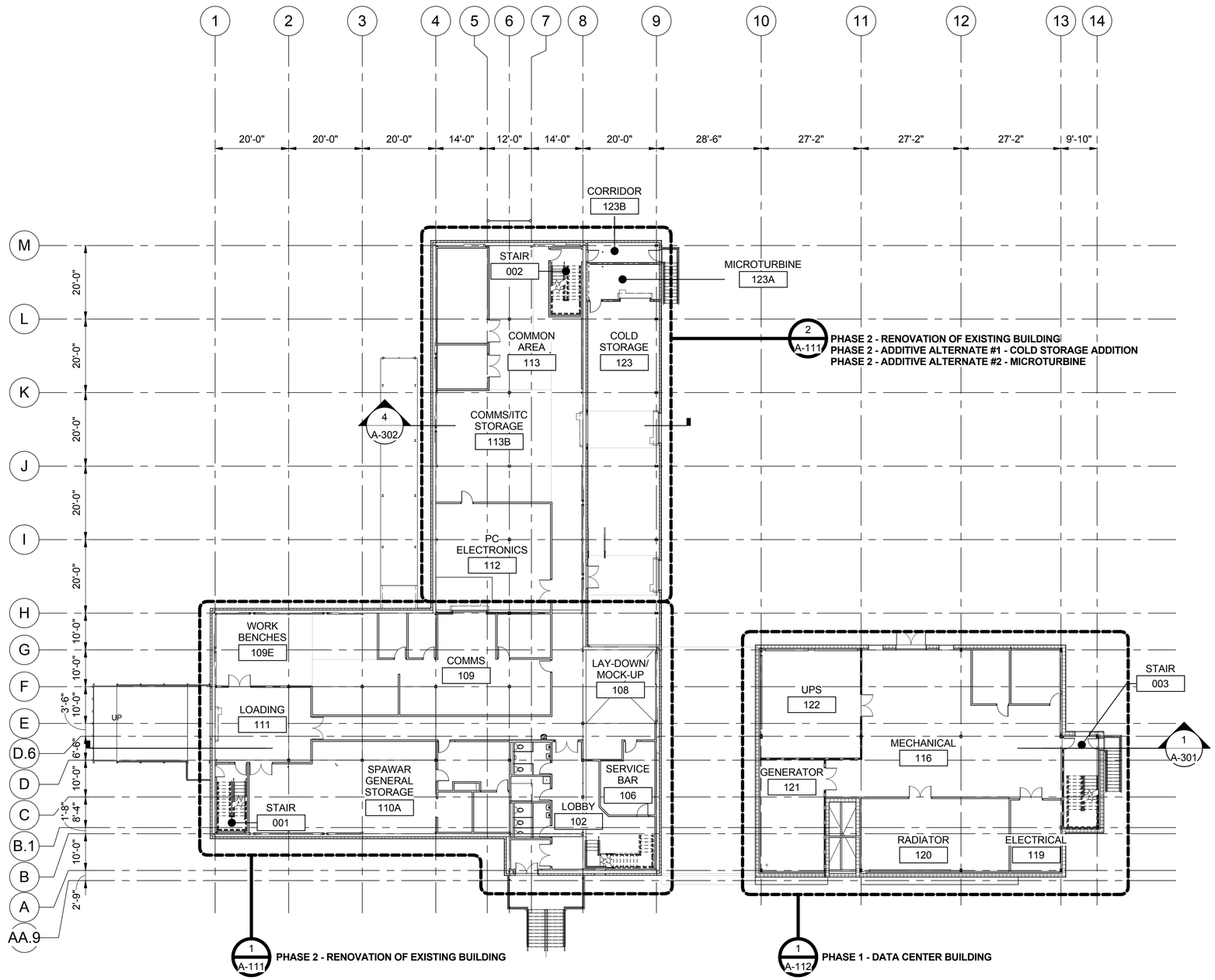

1 LEVEL 1 - FLOOR PLAN - OVERALL

1/16" = 1'-0"

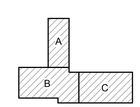

KEY PLAN

16 0 16 32

Scale: 1/16 INCH = 1 FOOT

N

PRELIMINARY DRAWING

FOR REVIEW ONLY - NOT FOR CONSTRUCTION

INCHES 1 2

CENTIMETERS 1 2 3 4 5 6

NATIONAL SCIENCE FOUNDATION

OFFICE OF POLAR PROGRAMS
WASHINGTON, D.C. NSF
CONTRACT OPP. 0000373

REVISION LOG

REV.	DATE	DESCRIPTION	DFTG.	APPD.
A	09/23/2016	30% DESIGN SUBMITTAL	DFTG.	APPD.

MCMURDO STATION
BL010: IT&C PRIMARY OPS FACILITY
ARCHITECTURE

7400 South Tucson Way
Centennial, Colorado
80112 - 3938 USA
303 - 790 - 8606
800 - 688 - 8606

ASC ANTARCTIC SUPPORT CONTRACT

PROJECT NUMBER: 160604MCM010

FILE NAME: 160604MCM010A-101-RA

DESIGNED BY: JF

DRAWN BY: JC, RB

DATE CHECKED: 9/23/16

SHEET TITLE: LEVEL 1 FLOOR PLAN OVERALL

SHEET NUMBER: A-101

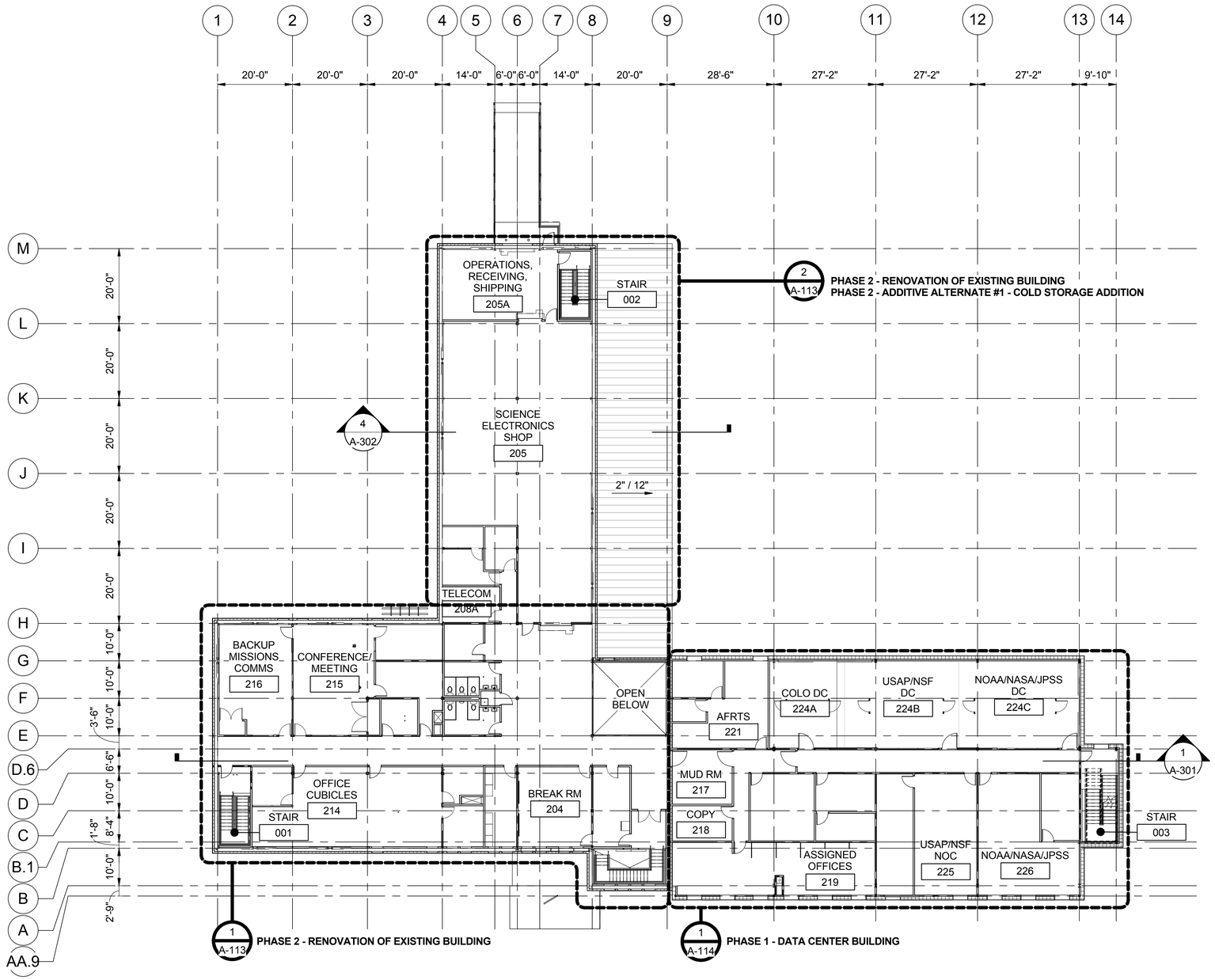

1 LEVEL 2 - FLOOR PLAN - OVERALL

1/16" = 1'-0"

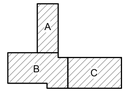

KEY PLAN

16 0 16 32

Scale: 1/16 INCH = 1 FOOT

N

PRELIMINARY DRAWING

FOR REVIEW ONLY - NOT FOR CONSTRUCTION

INCHES 1 2

CENTIMETERS 1 2 3 4 5 6

NATIONAL SCIENCE FOUNDATION

OFFICE OF POLAR PROGRAMS
WASHINGTON, D.C. NSF
CONTRACT OPP. 0000373

REVISION LOG

REV.	DATE	DESCRIPTION	DFTG.	APPD.
A	09/23/2016	30% DESIGN SUBMITTAL	DFTG.	APPD.

MCMURDO STATION
BL010: IT&C PRIMARY OPS FACILITY
ARCHITECTURE

7400 South Tucson Way
Centennial, Colorado
80112 - 3938 USA
303 - 790 - 8606
800 - 688 - 8606

ASC ANTARCTIC SUPPORT CONTRACT

PROJECT NUMBER: 160604MCM010

FILE NAME: 160604MCM010A-102-RA

DESIGNED BY: JF

DRAWN BY: JC, RB

DATE CHECKED: 9/23/16

SHEET TITLE: LEVEL 2 FLOOR PLAN OVERALL

SHEET NUMBER: A-102

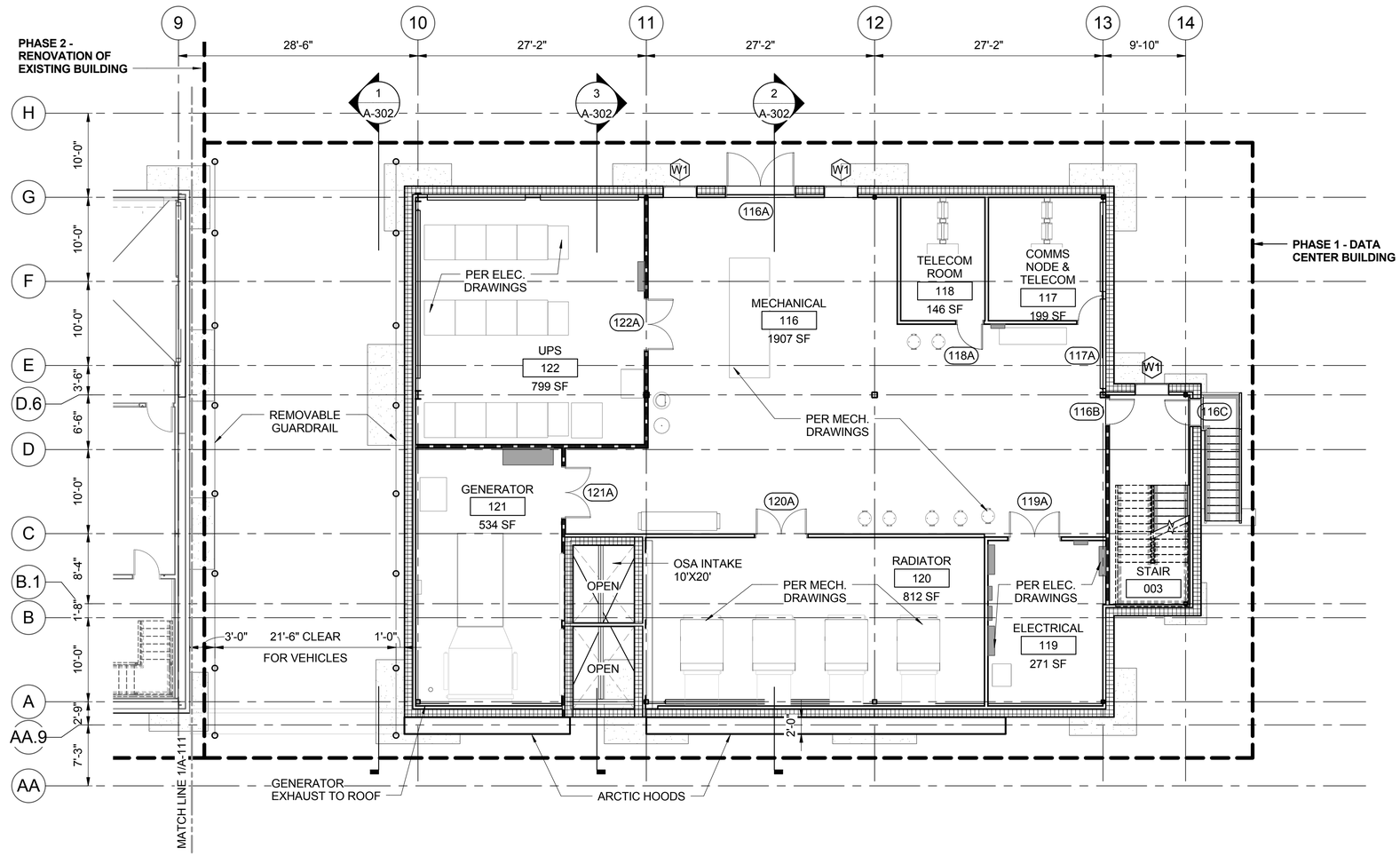

1 LEVEL 1 - FLOOR PLAN - AREA C

1/8" = 1'-0"

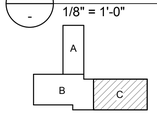

KEY PLAN

FLOOR PLAN LEGEND

- EXISTING WALL
- PARTITION, TYPICAL
- PARTITION, 1 HR FIRE RATED
- PARTITION, 2 HR FIRE RATED
- METAL CLAD STRUCTURAL INSULATED PANEL
- TRIPLE GLAZED WINDOW
- EXISTING DOOR
- NEW DOOR

8 0 8 16
Scale: 1/8 INCH = 1 FOOT

N

PRELIMINARY DRAWING
FOR REVIEW ONLY - NOT FOR CONSTRUCTION

INCHES 1 2
CENTIMETERS 1 2 3 4 5 6

NATIONAL SCIENCE FOUNDATION
OFFICE OF POLAR PROGRAMS
WASHINGTON, D.C. NSF
CONTRACT OPP. 0000373

REVISION LOG

REV.	DATE	DESCRIPTION	DFTG.	APPD.	DFTG.	APPD.
A	09/23/2016	30% DESIGN SUBMITTAL				

MCMURDO STATION
BL010: IT&C PRIMARY OPS FACILITY
ARCHITECTURE

7400 South Tucson Way
Centennial, Colorado
80112 - 3938 USA
303 - 790 - 8606
800 - 688 - 8606

ASC ANTARCTIC SUPPORT CONTRACT

PROJECT NUMBER: 160604MCM010
FILE NAME: 160604MCM010A-112-RA
DESIGNED BY: JF
DRAWN BY: JC, RB
DATE CHECKED: 9/23/16
SHEET TITLE: LEVEL 1 FLOOR PLAN AREA C
SHEET NUMBER: A-112

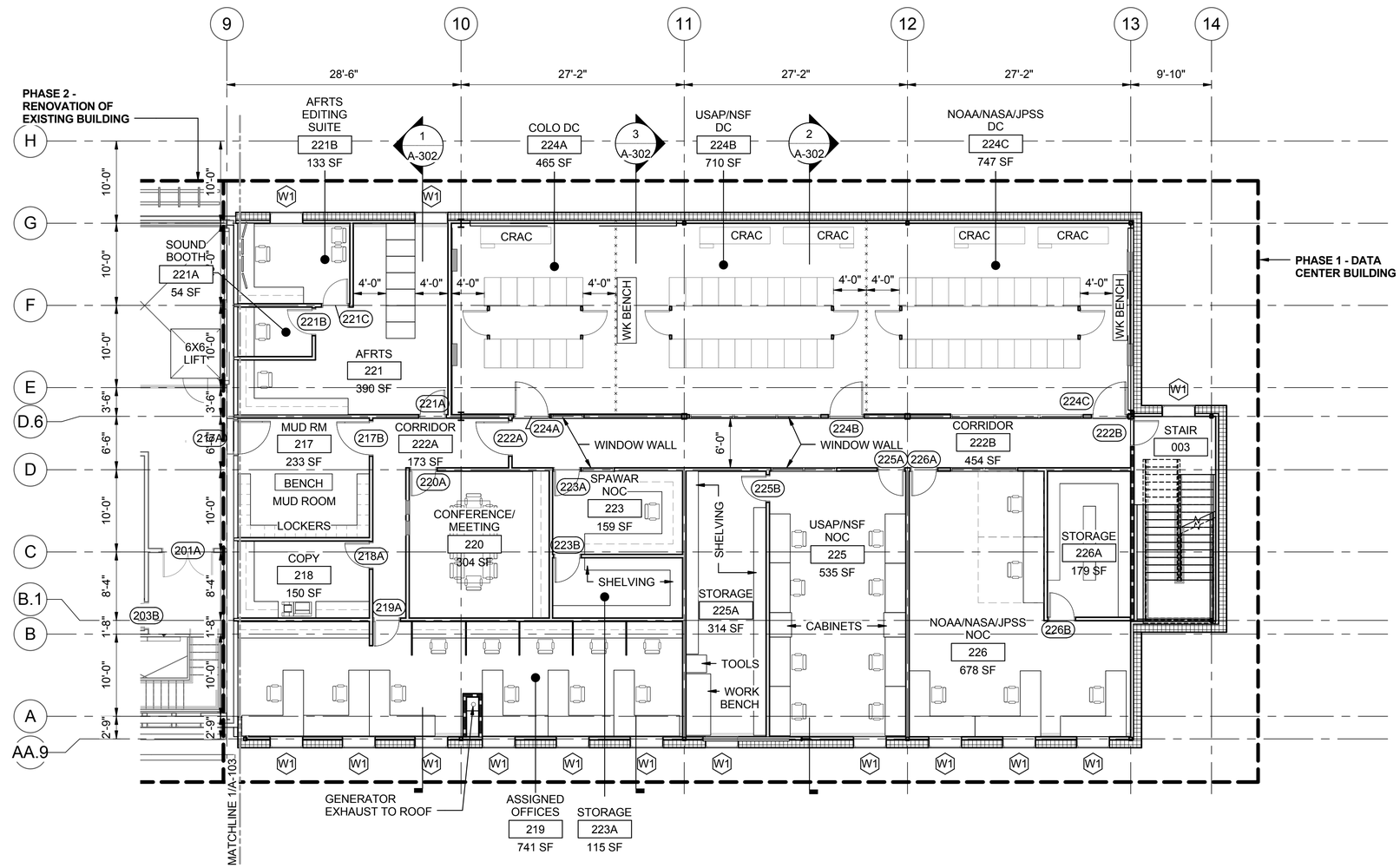

1 LEVEL 2 - FLOOR PLAN - AREA C

1/8" = 1'-0"

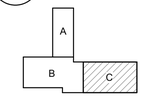

KEY PLAN

FLOOR PLAN LEGEND

- EXISTING WALL
- PARTITION, TYPICAL
- PARTITION, 1 HR FIRE RATED
- PARTITION, 2 HR FIRE RATED
- METAL CLAD STRUCTURAL INSULATED PANEL
- TRIPLE GLAZED WINDOW
- EXISTING DOOR
- NEW DOOR

Scale: 1/8 INCH = 1 FOOT

PRELIMINARY DRAWING
FOR REVIEW ONLY - NOT FOR CONSTRUCTION

NATIONAL SCIENCE FOUNDATION
OFFICE OF POLAR PROGRAMS
WASHINGTON, D.C. NSF
CONTRACT OPP. 0000373

REVISION LOG

REV.	DATE	DESCRIPTION	DFTG.	APPD.
A	09/23/2016	30% DESIGN SUBMITTAL	DFTG.	APPD.

MCMURDO STATION
BL010: IT&C PRIMARY OPS FACILITY
ARCHITECTURE

7400 South Tucson Way
Centennial, Colorado
80112 - 3938 USA
303 - 790 - 8606
800 - 688 - 8606

PROJECT NUMBER: 160604MCM010
FILE NAME: 160604MCM010A-114-RA
DESIGNED BY: JF
DRAWN BY: JC, RB
DATE CHECKED: 9/23/16
SHEET TITLE: LEVEL 2 FLOOR PLAN AREA C
SHEET NUMBER: A-114

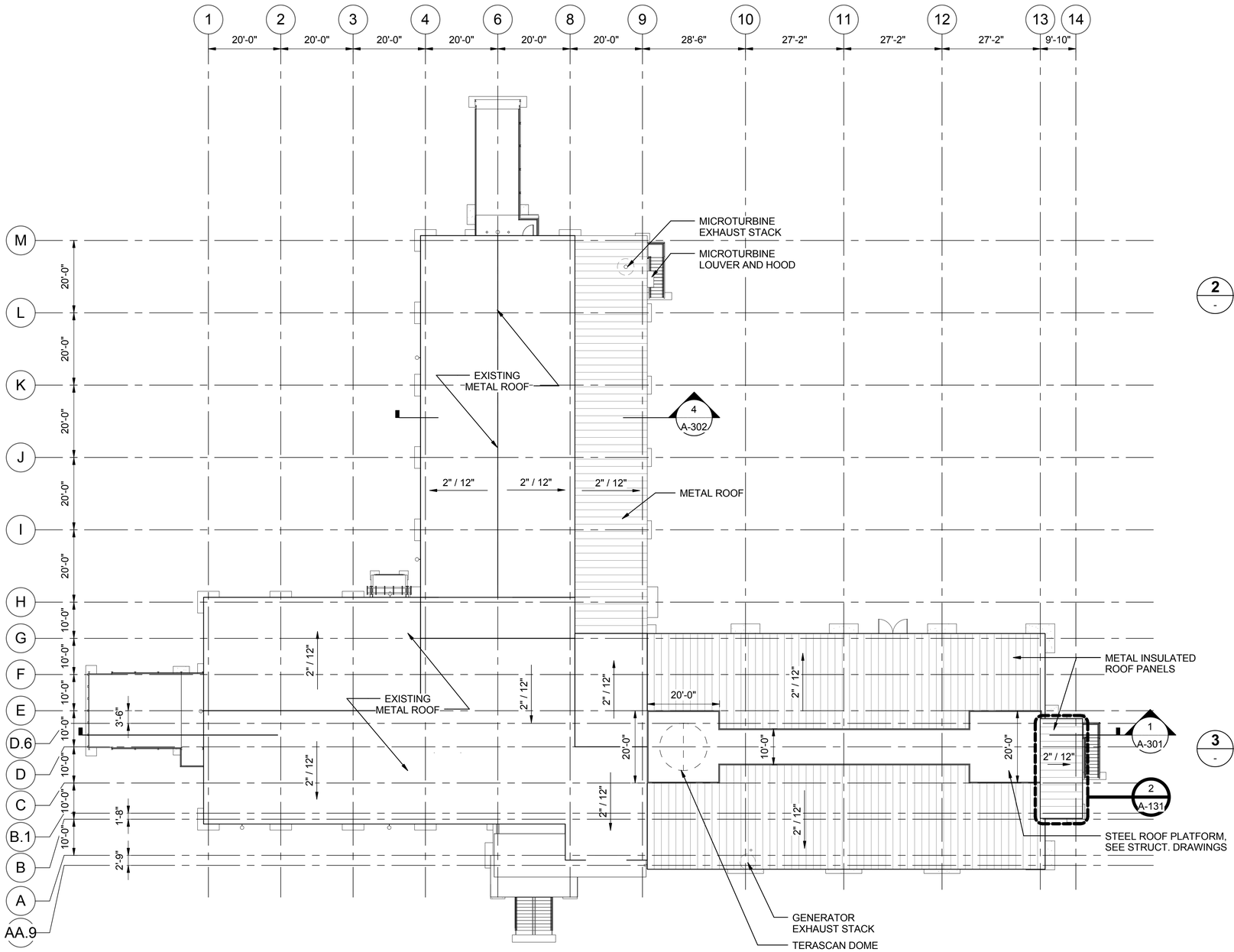

1 ROOF PLAN
1/16" = 1'-0"

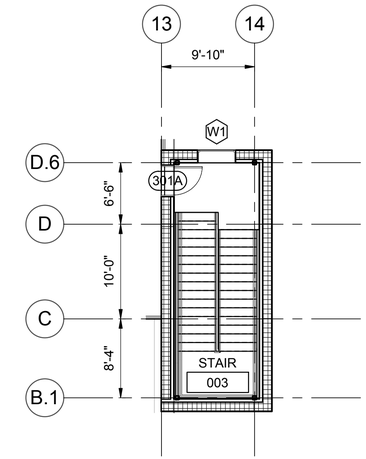

2 STAIRWELL
1/8" = 1'-0"

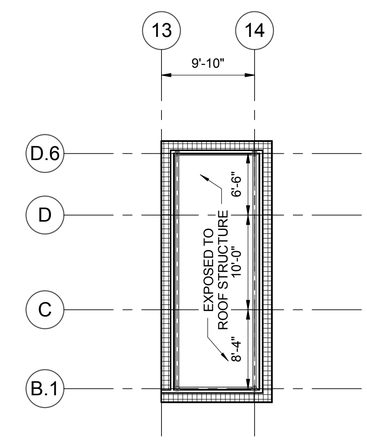

3 STAIRWELL - REFLECTED CEILING PLAN
1/8" = 1'-0"

Scale: 1/16 INCH = 1 FOOT

PRELIMINARY DRAWING
FOR REVIEW ONLY - NOT FOR CONSTRUCTION

NATIONAL SCIENCE FOUNDATION
OFFICE OF POLAR PROGRAMS
WASHINGTON, D.C. NSF
CONTRACT OPP. 0000373

REVISION LOG

REV.	DATE	DESCRIPTION	DFTG.	APPD.
A	09/23/2016	30% DESIGN SUBMITTAL	DFTG.	APPD.

MCMURDO STATION
BL010: IT&C PRIMARY OPS FACILITY
ARCHITECTURE

7400 South Tucson Way
Centennial, Colorado
80112 - 3938 USA
303 - 790 - 8606
800 - 688 - 8606

PROJECT NUMBER: 160604MCM010
FILE NAME: 160604MCM010A-131-RA
DESIGNED BY: JF
DRAWN BY: JC, RB
DATE CHECKED: 9/23/16
SHEET TITLE: ROOF PLAN
SHEET NUMBER: A-131

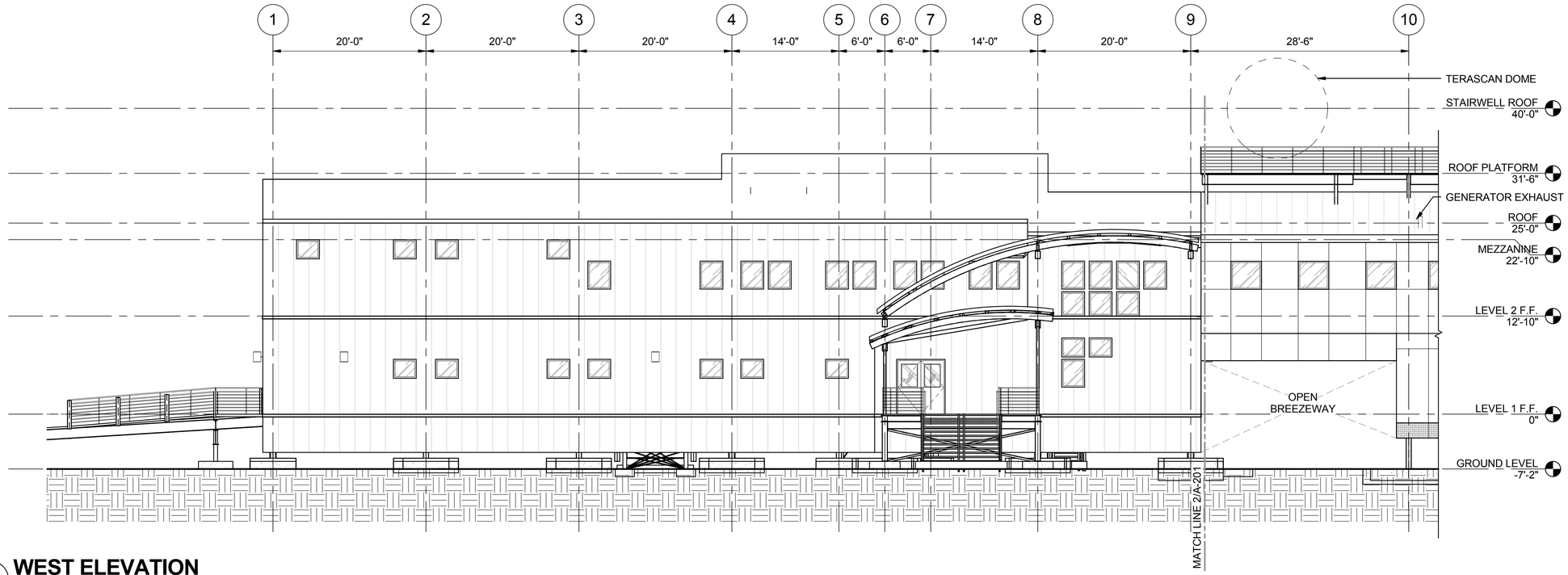

1 WEST ELEVATION

1/8" = 1'-0"

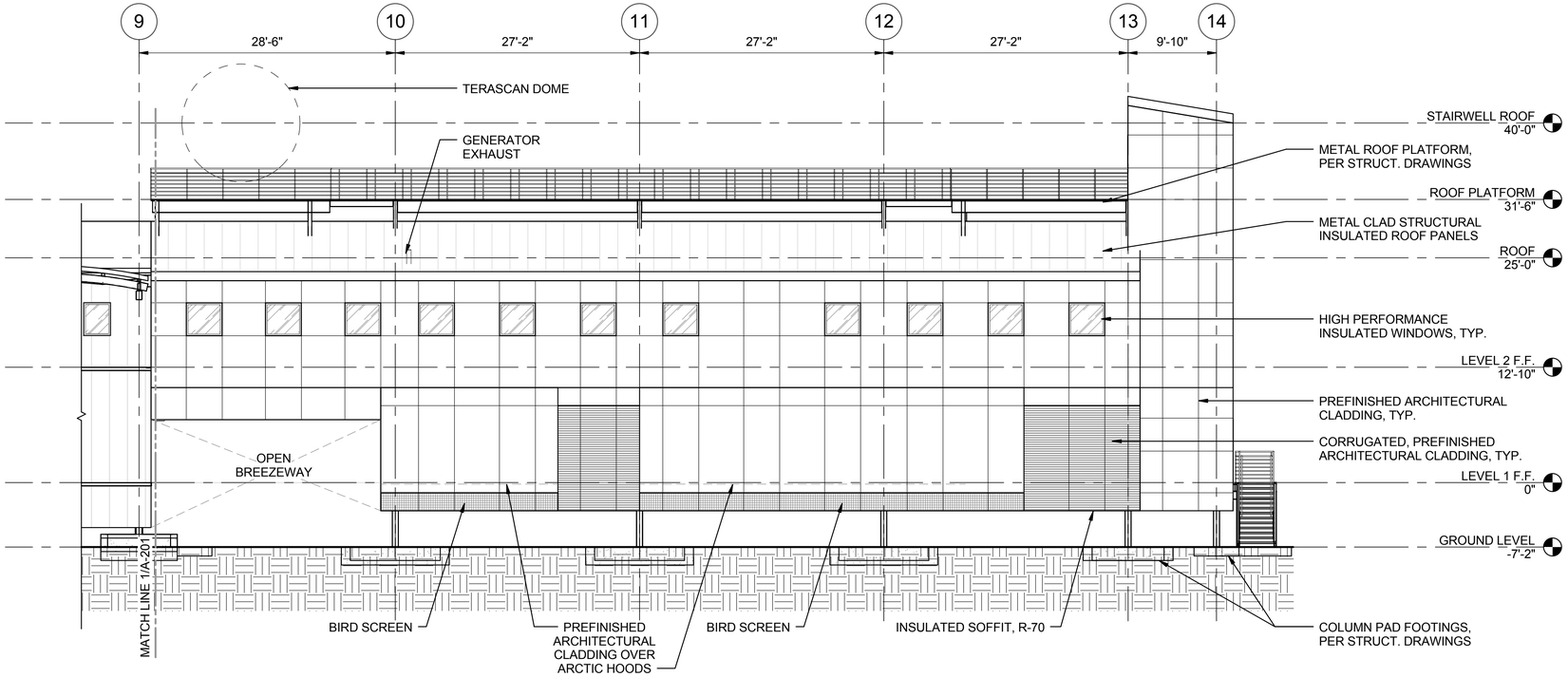

2 WEST ELEVATION - CONTINUED

1/8" = 1'-0"

8 0 8 16

Scale: 1/8 INCH = 1 FOOT

PRELIMINARY DRAWING

FOR REVIEW ONLY - NOT FOR CONSTRUCTION

INCHES 1 2

CENTIMETERS 1 2 3 4 5 6

NATIONAL SCIENCE FOUNDATION

OFFICE OF POLAR PROGRAMS
WASHINGTON, D.C. NSF
CONTRACT OPP. 0000373

REVISION LOG

REV.	DATE	DESCRIPTION	DFTG.	APPD.
A	09/23/2016	30% DESIGN SUBMITTAL	DFTG.	APPD.

MCMURDO STATION
BL010: IT&C PRIMARY OPS FACILITY
ARCHITECTURE

7400 South Tucson Way
Centennial, Colorado
80112 - 3938 USA
303 - 790 - 8606
800 - 688 - 8606

ASC ANTARCTIC SUPPORT CONTRACT

PROJECT NUMBER: 160604MCM010

FILE NAME: 160604MCM010A-201-RA

DESIGNED BY: JF

DRAWN BY: JC, RB

DATE CHECKED: 9/23/16

SHEET TITLE: EXTERIOR ELEVATIONS

SHEET NUMBER: A-201

1 2 3 4 5 6 7 8

A B C D

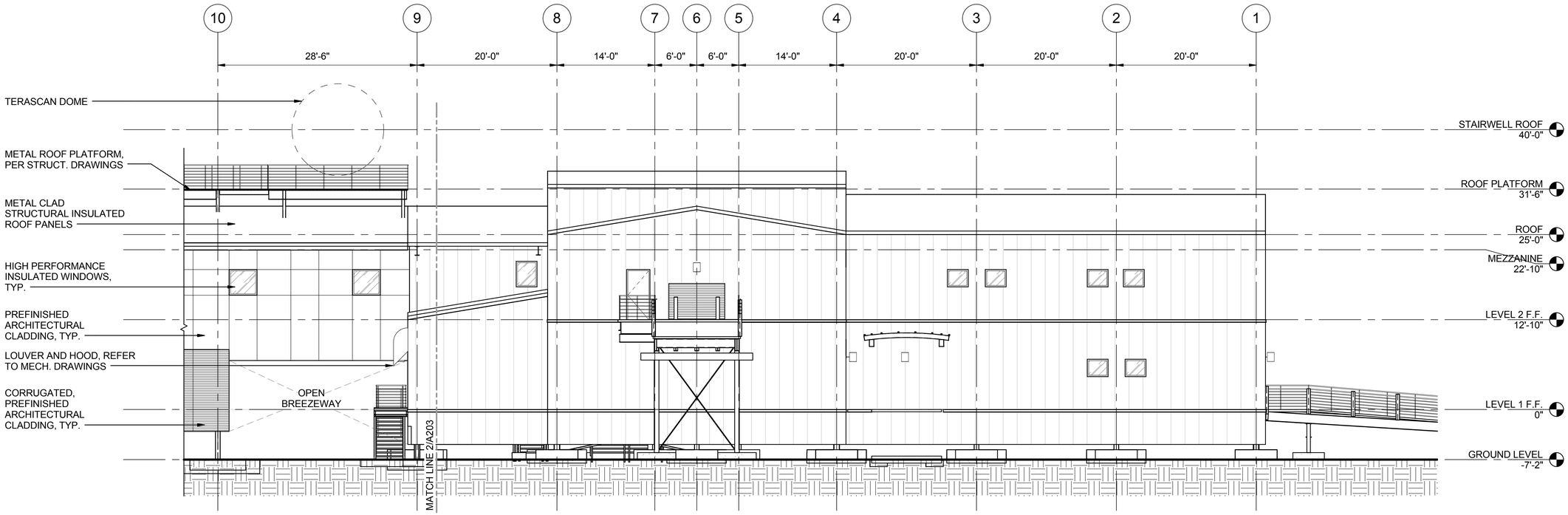

1 EAST ELEVATION

1/8" = 1'-0"

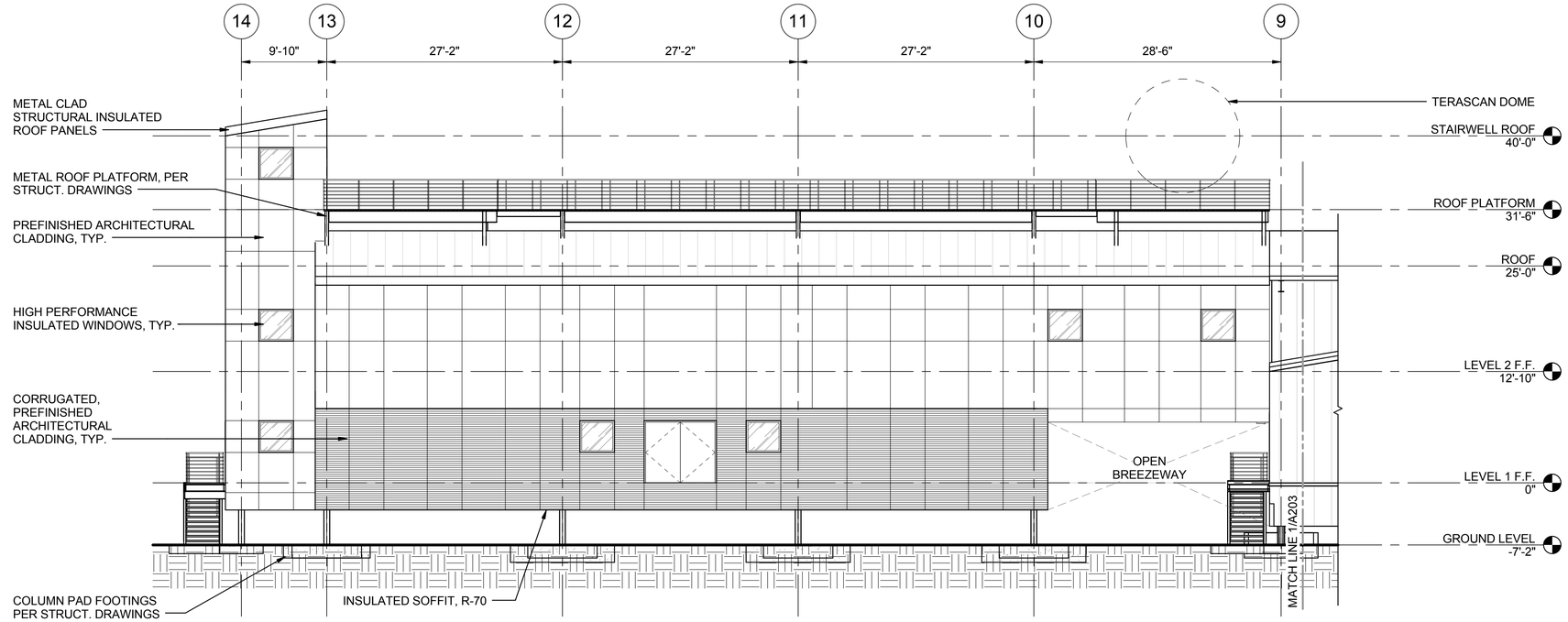

2 EAST ELEVATION - CONTINUED

1/8" = 1'-0"

8 0 8 16
Scale: 1/8 INCH = 1 FOOT

PRELIMINARY DRAWING
FOR REVIEW ONLY - NOT FOR CONSTRUCTION

INCHES 1 2
CENTIMETERS 1 2 3 4 5 6

NATIONAL SCIENCE FOUNDATION
OFFICE OF POLAR PROGRAMS
WASHINGTON, D.C. NSF
CONTRACT OPP. 0000373

REVISION LOG

REV.	DATE	DESCRIPTION	DFTG.	APPD.	DFTG.	APPD.
A	09/23/2016	30% DESIGN SUBMITTAL				

MCMURDO STATION
BL010: IT&C PRIMARY OPS FACILITY
ARCHITECTURE

7400 South Tucson Way
Centennial, Colorado
80112 - 3938 USA
303 - 790 - 8606
800 - 688 - 8606

ASC ANTARCTIC SUPPORT CONTRACT

PROJECT NUMBER: 160604MCM010
FILE NAME: 160604MCM010A-203-RA
DESIGNED BY: JF
DRAWN BY: JC, RB
DATE CHECKED: 9/23/16
SHEET TITLE: EXTERIOR ELEVATIONS
SHEET NUMBER: A-203

D C B A

1 2 3 4 5 6 7 8

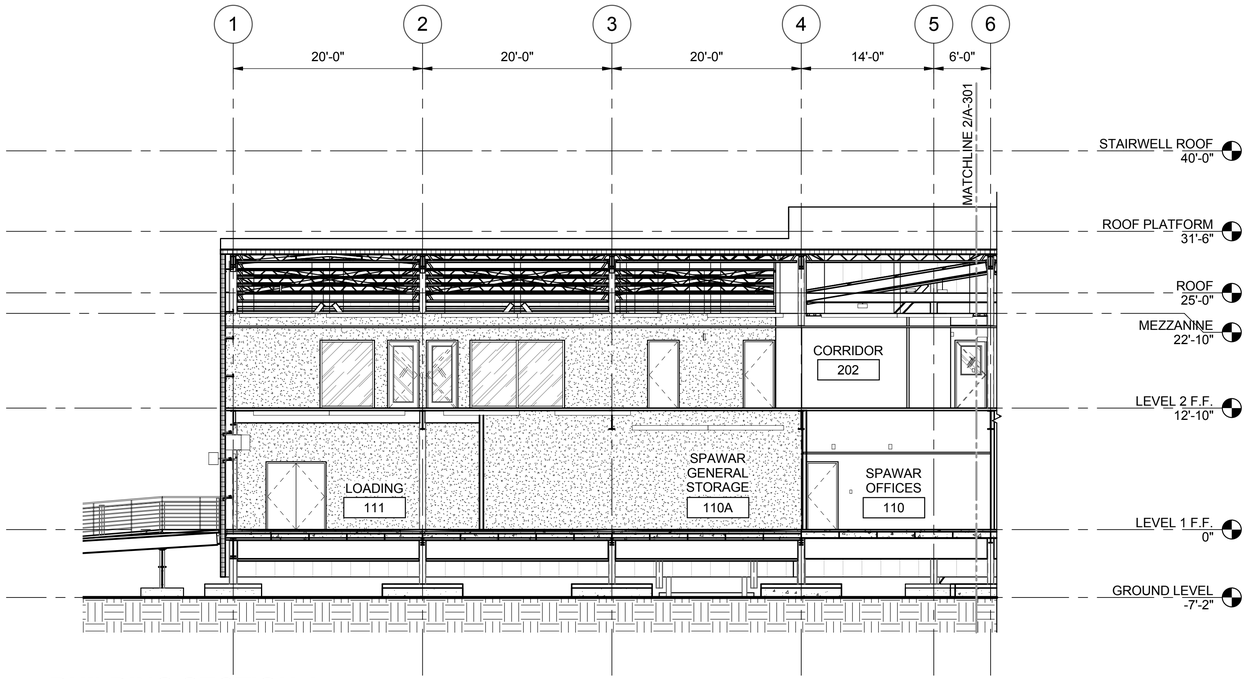

1 BUILDING SECTION A

1/8" = 1'-0"

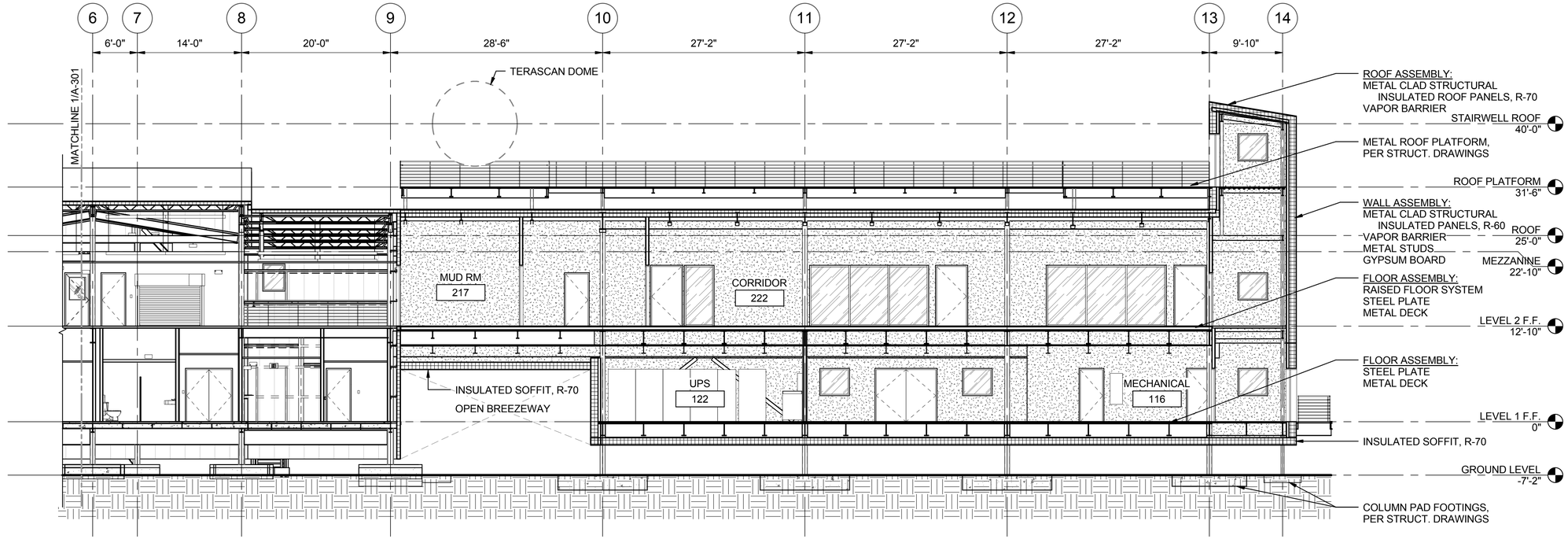

2 BUILDING SECTION A - CONTINUED

1/8" = 1'-0"

8 0 8 16
Scale: 1/8 INCH = 1 FOOT

PRELIMINARY DRAWING
FOR REVIEW ONLY - NOT FOR CONSTRUCTION

INCHES 1 2
CENTIMETERS 1 2 3 4 5 6

NATIONAL SCIENCE FOUNDATION
OFFICE OF POLAR PROGRAMS
WASHINGTON, D.C. NSF
CONTRACT OPP. 0000373

REVISION LOG

REV.	DATE	DESCRIPTION	DFTG.	APPD.
A	09/23/2016	30% DESIGN SUBMITTAL	DFTG.	APPD.

MCMURDO STATION
BL010: IT&C PRIMARY OPS FACILITY
ARCHITECTURE

7400 South Tucson Way
Centennial, Colorado
80112 - 3938 USA
303 - 790 - 8606
800 - 688 - 8606
ASC ANTARCTIC SUPPORT CONTRACT

PROJECT NUMBER: 160604MCM010
FILE NAME: 160604MCM010A-301-RA
DESIGNED BY: JF
DRAWN BY: JC, RB
DATE CHECKED: 9/23/16
SHEET TITLE: BUILDING SECTIONS
SHEET NUMBER: A-301

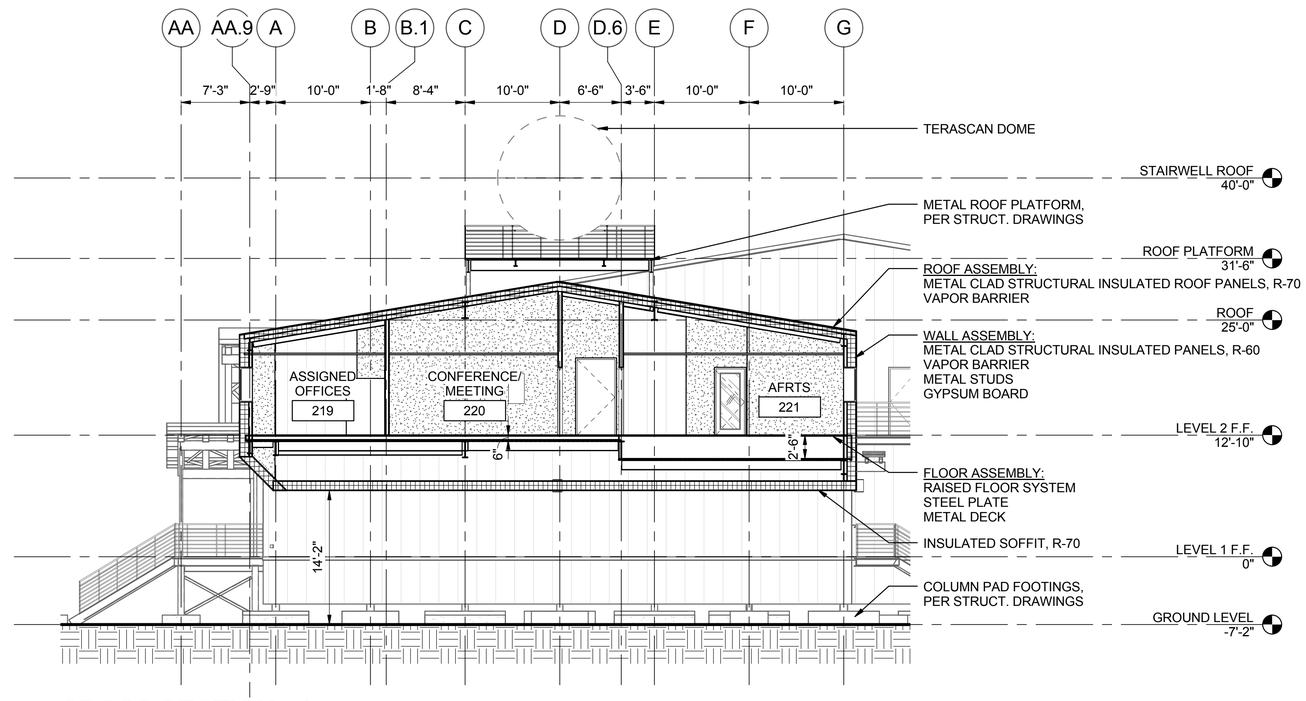

1 - **CROSS SECTION - 1**
1/8" = 1'-0"

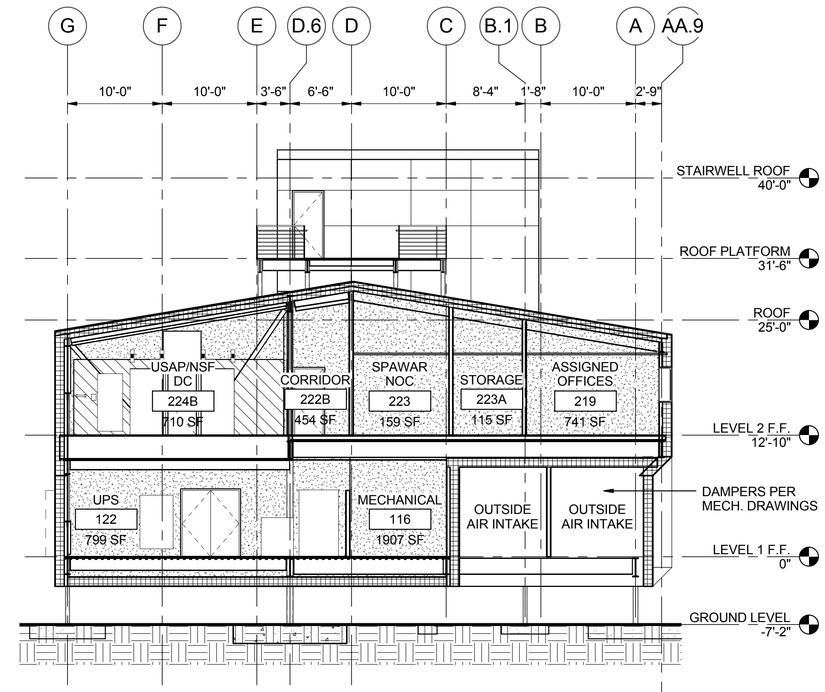

3 - **CROSS SECTION - 3**
1/8" = 1'-0"

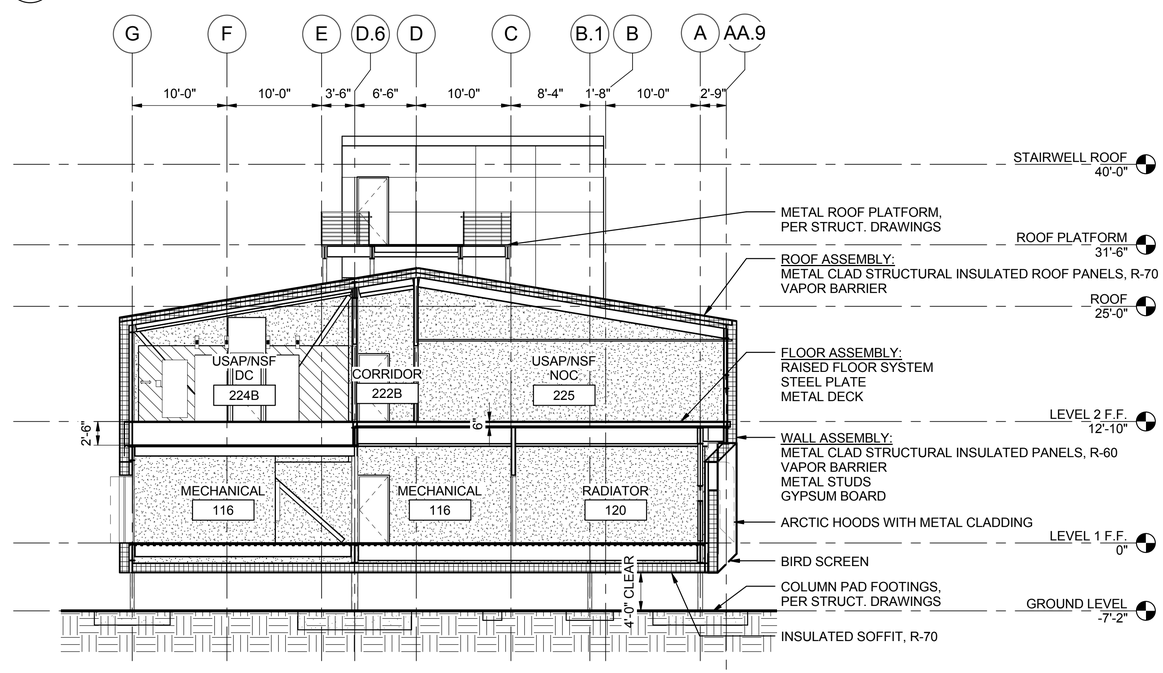

2 - **CROSS SECTION - 2**
1/8" = 1'-0"

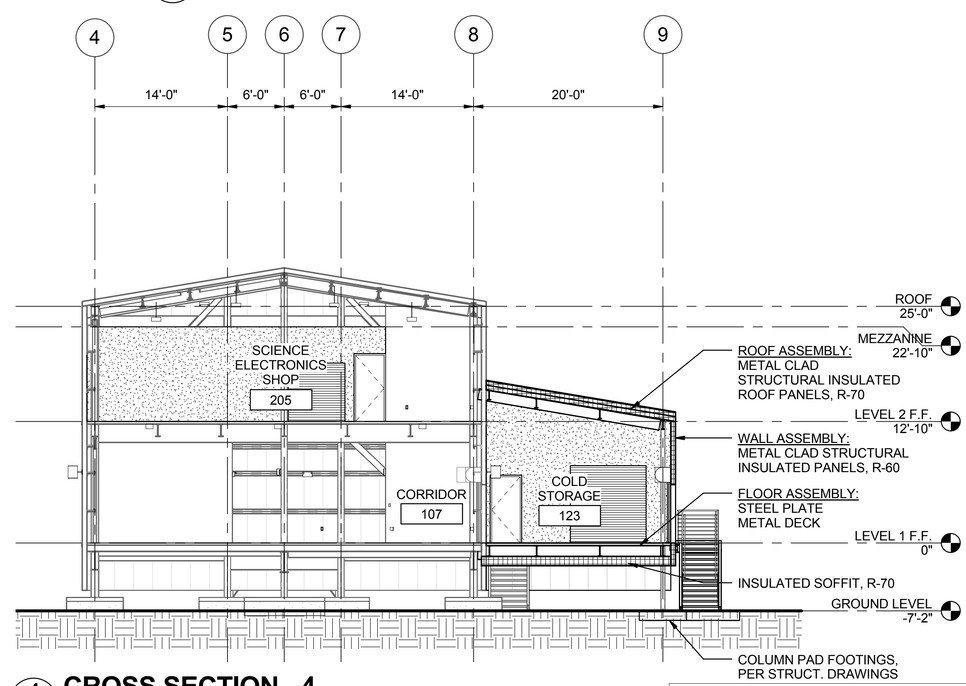

4 - **CROSS SECTION - 4**
1/8" = 1'-0"

8 0 8 16
Scale: 1/8 INCH = 1 FOOT

PRELIMINARY DRAWING
FOR REVIEW ONLY - NOT FOR CONSTRUCTION

INCHES 1 2
CENTIMETERS 1 2 3 4 5 6

NATIONAL SCIENCE FOUNDATION
OFFICE OF POLAR PROGRAMS
WASHINGTON, D.C. NSF
CONTRACT OPP. 0000373

REVISION LOG

REV.	DATE	DESCRIPTION	DFTG.	APPD.	DFTG.	APPD.
A	09/23/2016	30% DESIGN SUBMITTAL				

MCMURDO STATION
BL010: IT&C PRIMARY OPS FACILITY
ARCHITECTURE

7400 South Tucson Way
Centennial, Colorado
80112 - 3938 USA
303 - 790 - 8606
800 - 688 - 8606
ASC ANTARCTIC SUPPORT CONTRACT

PROJECT NUMBER: 160604MCM010
FILE NAME: 160604MCM010A-302-RA
DESIGNED BY: JF
DRAWN BY: JC, RB
DATE CHECKED: 9/23/16
SHEET TITLE: BUILDING SECTIONS
SHEET NUMBER: A-302

GENERAL

DETAIL SYMBOL — 1 / A101 — DETAIL IDENTIFICATION; DRAWING ON WHICH DETAIL IS SHOWN

SECTION SYMBOL — A / A101 — SECTION IDENTIFICATION; DRAWING ON WHICH SECTION IS SHOWN

ROOM NAME AND NUMBER DESIGNATION

SHEET NOTE REFERENCE — 1

GENERAL SHEET NOTE — 3.

PLUMBING FIXTURE DESIGNATION, SEE FIXTURE CONNECTION SCHEDULE — P-1

EQUIPMENT DESIGNATION, SEE EQUIPMENT SCHEDULE — T-1

TERMINAL HEATING UNIT DESIGNATION — UH-1 / 83 / 7.0 — EQUIPMENT DESIGNATION; GPM; LINEAL FEET OR MBH OUTPUT

POINT OF CONNECTION

VAV TAG — (E)VAV-100

TO BE DEMOLISHED OR RELOCATED

EXISTING TO REMAIN

NEW

VENTILATION SYMBOLS

MOTORIZED CONTROL DAMPER — M — PARALLEL OPPOSED

CENTRIFUGAL FAN

PLENUM/PLUG FAN

AIRFLOW STATION

HEATING/PREHEAT COIL

COOLING COIL

SOUND ATTENUATOR

HUMIDIFIER

LOUVER

CARBON FILTER

SUMMER/PRE-FILTER

FINAL FILTER

AIR BLENDER

BACKDRAFT DAMPER

PIPE FITTINGS & VALVES

ELBOW, TURNED DOWN

ELBOW, TURNED UP

TEE, OUTLET DOWN

TEE, OUTLET UP

FLOW DIRECTION

CONCENTRIC REDUCER

ISOLATION VALVE

BALL VALVE

PRESSURE REDUCING VALVE

CHECK VALVE

STRAINER

STRAINER W/ BLOWDOWN

PRESSURE TEMPERATURE TAP ("PETE'S PLUG")

AUTOMATIC FLOW CONTROL VALVE

BALANCE VALVE

MOTORIZED 2-WAY CONTROL VALVE

MOTORIZED 3-WAY CONTROL VALVE

RELIEF OR SAFETY VALVE

DRAIN ISOLATION VALVE AND HOSE ADAPTOR

DRAIN ISOLATION VALVE AND CAP

UNION

FLANGE CONNECTION

PIPE ANCHOR

PIPE GUIDE

METER — M

TRIPLE-DUTY VALVE

2-WAY TEMPERING VALVE

3-WAY TEMPERING VALVE

THERMOMETER

PRESSURE GAUGE W/ ISOLATION VALVE

PUMP - CIRC

PUMP - INLINE

HEATING & COOLING

SUPPLY

RETURN

AUTOMATIC AIR VENT W/ ISOLATION VALVE

UNIT HEATER PLAN VIEW — HORIZONTAL

CABINET UNIT HEATER PLAN VIEW — HORIZONTAL VERTICAL

FINNED TUBE PLAN VIEW

VENTILATION

DUCT (1ST FIGURE, SIDE SHOWN 2ND FIGURE, SIDE NOT SHOWN) — 18"X12"

DIRECTION OF FLOW

DUCT WITH INSULATION

DUCT WITH SOUND LINING

SUPPLY DUCT SECTION — (UP) (DN)

RETURN DUCT SECTION — (UP) (DN)

EXHAUST DUCT SECTION — (UP) (DN)

SUPPLY REGISTER. GRILLE, OR DIFFUSER

RETURN REGISTER. GRILLE, OR DIFFUSER

EXHAUST REGISTER, GRILLE OR DIFFUSER

FLEXIBLE CONNECTIONS

VOLUME DAMPER — VD

FIRE DAMPER — F
SMOKE DAMPER — SD
COMBINATION FIRE/SMOKE DAMPER — FSD

TURNING VANES

DUCT SMOKE DETECTOR — SM

VAV BOX

CARBON MONOXIDE — CO

CARBON DIOXIDE — CO_2

PRESSURE SENSOR — P

TEMPERATURE SENSOR — T

HUMIDITY SENSOR — H

ABBREVIATIONS

ACFM	ACTUAL CUBIC FEET PER
AFF	ABOVE FINISHED FLOOR
AGT	AVERAGE GLYCOL TEMPERATURE
AHAP	AS HIGH AS POSSIBLE
AHU	AIR HANDLING UNIT
APPROX	APPROXIMATE
AS	AIR SEPARATOR
AV	ACID VENT
AVTR	ACID VENT THROUGH ROOF
AW	ACID WASTE
BTU	BRITISH THERMAL UNIT
CA	COMPRESSED AIR
CFM	CUBIC FEET PER MINUTE
CIRC	CIRCULATION
CH	CHILLER
CLNG	CEILING
CO	CARBON MONOXIDE
CO2	CARBON DIOXIDE
CONT	CONTINUATION, CONTINUED
CP	CIRCULATING PUMP
CR	CONDENSATE RETURN
CRAC	COMPUTER ROOM AIR CONDITIONING UNIT
CU	COPPER
CW	COLD WATER
CWR	CHILLED WATER RETURN
CWS	CHILLED WATER SUPPLY
DDC	DIRECT DIGITAL CONTROLS
DIA	DIAMETER
DHWC	DOMESTIC HOT WATER CIRC
DN	DOWN
DWR	DEMINERALIZED WATER RETURN
DWS	DEMINERALIZED WATER SUPPLY
DX	DIRECT EXPANSION
(E)	EXISTING
EA	EXHAUST AIR
EBB	ELECTRIC BASEBOARD
EF	EXHAUST FAN
EGT	ENTERING GLYCOL TEMPERATURE
ENT	ENTERING
ET	EXPANSION TANK
EUH	ELECTRIC UNIT HEATER
EWT	ENTERING WATER TEMPERATURE
FCO	FLOOR CLEANOUT
FCU	FAN COIL UNIT
FD	FIRE DAMPER
FD	FLOOR DRAIN
FM	FORCED MAIN
FT	FEET
FT	FINNED TUBE
FSD	FIRE SMOKE DAMPER
GAL	GALLONS
GALV	GALVANIZED
GCR	GLYCOL COOLING RETURN
GCS	GLYCOL COOLING SUPPLY
GHR	GLYCOL HEATING RETURN
GHS	GLYCOL HEATING SUPPLY
GI	GREASE INTERCEPTOR
GMT	GLYCOL MAKE-UP TANK
GPM	GALLONS PER MINUTE
HB	HOSE BIBB
HC	HEATING COIL
HP	HORSE POWER
HRV	HEAT RECOVERY VENTILATOR
HW	HOT WATER
HWC	HOT WATER CIRCULATION
HWR	HEATING WATER RETURN
HWS	HEATING WATER SUPPLY
HX	HEAT EXCHANGER
HZ	HERTZ
ID	INSIDE DIAMETER
IN	INCHES
LAV	LAVATORY
LF	LINEAL FEET
LGT	LEAVING GLYCOL TEMP
LHWR RETURN	LOW TEMP HEATING WATER
LHWS SUPPLY	LOW TEMP HEATING WATER
LVG	LEAVING
LW	LAB WASTE
LWH	LAB WATER HEATER
LWT	LEAVING WATER TEMPERATURE
MAX	MAXIMUM
MBH	THOUSAND BTU's PER HOUR
MIN	MINIMUM
MBH	THOUSAND BTU's PER HOUR
MIN	MINIMUM
MISC	MISCELLANEOUS
NC	NORMALLY CLOSED
NO	NORMALLY OPEN
NO.	NUMBER
NPCW	NON POTABLE COLD WATER
02	OXYGEN
OA	OUTSIDE AIR
OC	ON CENTER
ORD	OVERFLOW ROOF DRAIN
ORL	OVERFLOW RAIN LEADER
OSA	OUTSIDE AIR SUPPLY
P	PUMP
PCR	PUMPED CONDENSATE RETURN
PD	PRESSURE DROP
PDI	PLUMBING & DRAINAGE INSTITUTE
PG	PROPYLENE GLYCOL
PH	PHASE
PHC	PRE HEAT COIL
POC	POINT OF CONNECTION
PSIG	POUNDS PER SQUARE INCH GAUGE
PSI	POUNDS PER SQUARE INCH
PW	PUMPED WASTE
RA	RETURN AIR
RCP	RADIANT CEILING PANEL
RD	ROOF DRAIN
RECIRC	RECIRCULATION
RFL	REFRIGERANT LIQUID
RFM	RADIANT FLOOR MANIFOLD
RFS	REFRIGERANT SUCTION
RHC	REHEAT HEATING COIL
RL	RAINLEADER
RPBP	REDUCED PRESSURE ZONE BACKFLOW PREVENTER
RTU	ROOF TOP UNIT
RV	REFRIGERANT VAPOR
RWL	RAIN WATER LEADER
RZ	RADIANT ZONE
SA	SUPPLY AIR
SCH	SCHEDULE
SD	STORM DRAIN
SF	SQUARE FEET
SF	SUPPLY FAN
SH	STEAM HUMIDIFIER
SP	SUMP PUMP
SS	STAINLESS STEEL
TA	TRANSFER AIR
TEMP	TEMPERATURE
TDH	TOTAL DEVELOPED HEAD
TP	TRAP PRIMER
TYP	TYPICAL
UL	UNDERWRITER'S LABORATORY
UON	UNLESS OTHERWISE NOTED
VAV	VARIABLE AIR VOLUME
UH	UNIT HEATER
VTR	VENT THROUGH ROOF
VR	VENT RISER
W	WASTE
W/	WITH
W.C.	WATER COLUMN
WCO	WALL CLEANOUT
WH	WATER HEATER
WHA	WATER HAMMER ARRESTOR
WPD	WATER PRESSURE DROP
WRT	WITH RESPECT TO

PRELIMINARY DRAWING
FOR REVIEW ONLY - NOT FOR CONSTRUCTION

INCHES 1 2 — CENTIMETERS 1 2 3 4 5 6

NATIONAL SCIENCE FOUNDATION
OFFICE OF POLAR PROGRAMS
WASHINGTON, D.C. NSF
CONTRACT OPP. 0000373

REVISION LOG

REV.	DATE	DESCRIPTION	DFTG.	APPD.
A	09/23/2016	30% DESIGN SUBMITTAL	MEB	CDF

MCMURDO STATION
BL010 - IT PRIMARY OPERATIONS FACILITY
MECHANICAL

7400 South Tucson Way
Centennial, Colorado
80112 - 3938 USA
303 - 790 - 8606
800 - 688 - 8606
ASC ANTARCTIC SUPPORT CONTRACT

PROJECT NUMBER: 160604MCM010
FILE NAME: 160604MCM010M-001-RA
DESIGNED BY: JEE/CDF
DRAWN BY: MEB
DATE CHECKED: 09/23/16
SHEET TITLE: MECHANICAL SYMBOL LEGEND AND ABBREVIATIONS
SHEET NUMBER: M-001

1 2 3 4 5 6 7 8

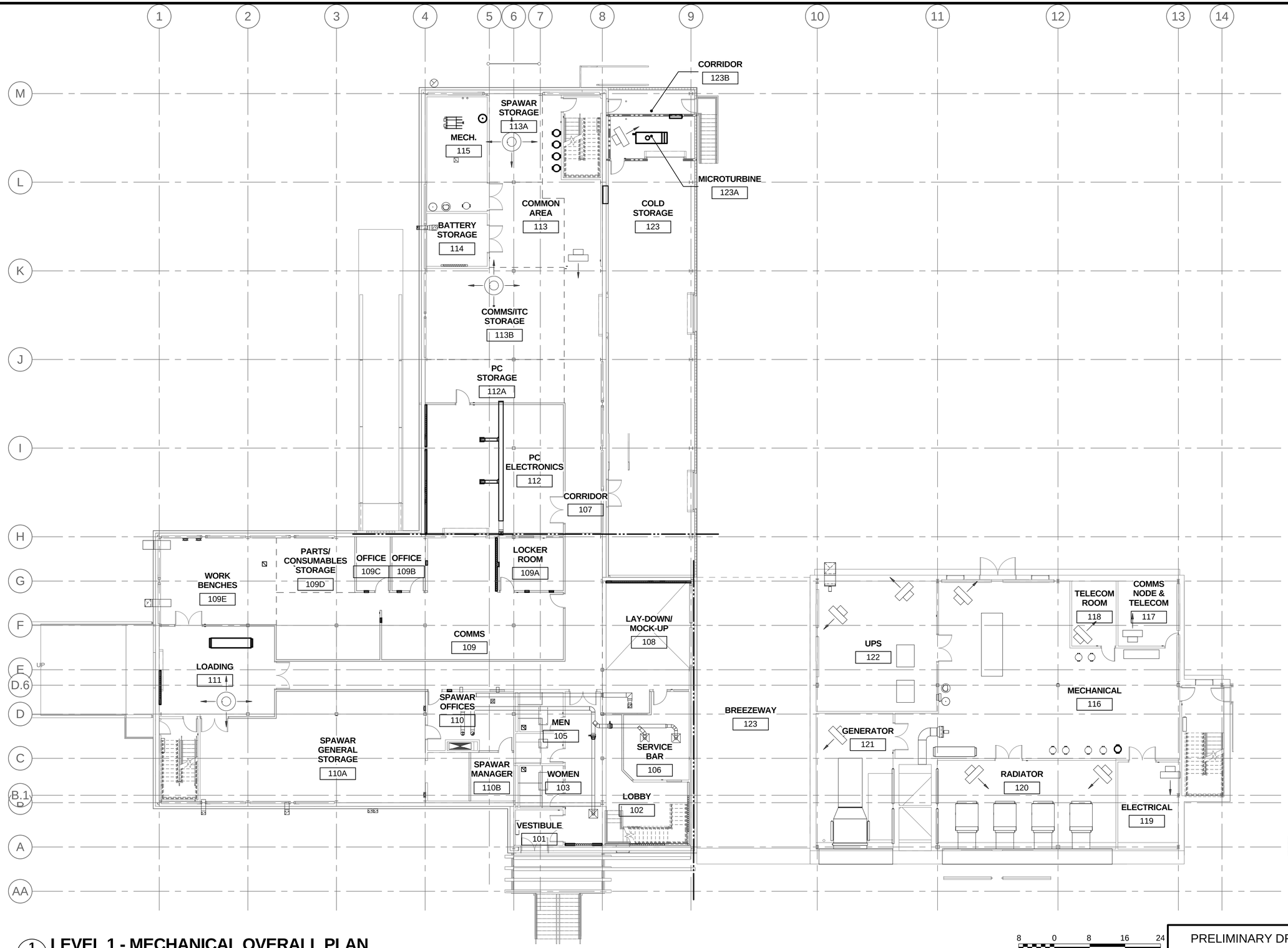

1 LEVEL 1 - MECHANICAL OVERALL PLAN

3/32" = 1'-0"

KEY PLAN

Scale: 3/32 INCH = 1 FOOT

PRELIMINARY DRAWING

FOR REVIEW ONLY - NOT FOR CONSTRUCTION

INCHES / CENTIMETERS

NATIONAL SCIENCE FOUNDATION

OFFICE OF POLAR PROGRAMS
WASHINGTON, D.C. NSF
CONTRACT OPP. 0000373

REVISION LOG

REV.	DATE	DESCRIPTION	DFTG.	APPD.
A	09/23/2016	30% DESIGN SUBMITTAL	MEB	CDF

MCMURDO STATION
BL010 - IT PRIMARY OPERATIONS FACILITY
MECHANICAL

7400 South Tucson Way
Centennial, Colorado
80112 - 3938 USA
303 - 790 - 8606
800 - 688 - 8606

ASC ANTARCTIC SUPPORT CONTRACT

PROJECT NUMBER: 160604MCM010

FILE NAME: 160604MCM010M-101-RA

DESIGNED BY: JEE/CDF

DRAWN BY: MEB

DATE CHECKED: 09/23/16

SHEET TITLE: LEVEL 1 - MECHANICAL OVERALL PLAN

SHEET NUMBER: M-101

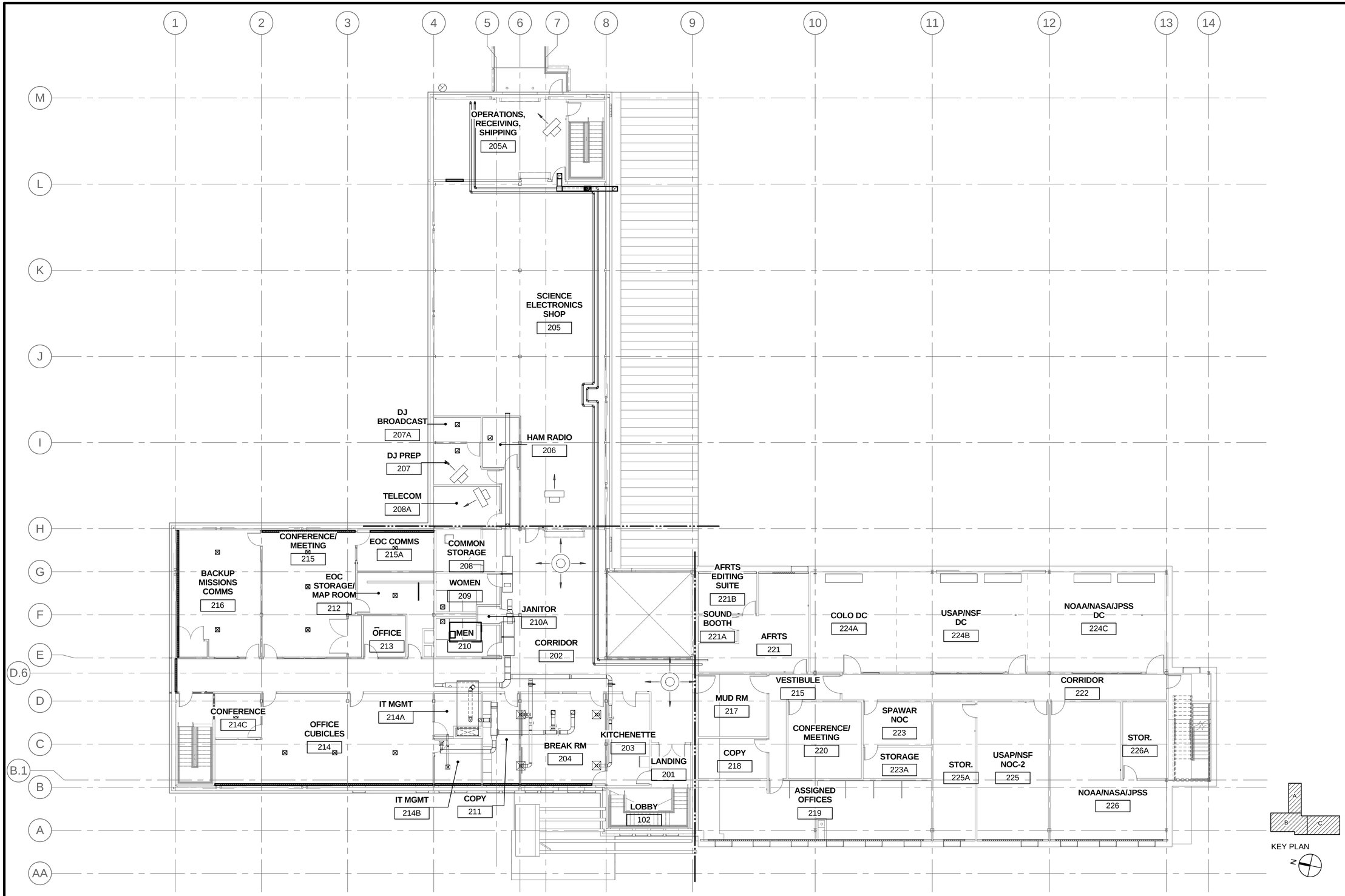

1 LEVEL 2 - MECHANICAL OVERALL PLAN
3/32" = 1'-0"

Scale: 3/32 INCH = 1 FOOT

PRELIMINARY DRAWING
FOR REVIEW ONLY - NOT FOR CONSTRUCTION

INCHES / CENTIMETERS

NATIONAL SCIENCE FOUNDATION
OFFICE OF POLAR PROGRAMS
WASHINGTON, D.C. NSF
CONTRACT OPP: 0000373

REVISION LOG

REV.	DATE	DESCRIPTION	DFTG.	APPD.
A	09/23/2016	30% DESIGN SUBMITTAL	MEB	CDF

MCMURDO STATION
BL010 - IT PRIMARY OPERATIONS FACILITY
MECHANICAL

7400 South Tucson Way
Centennial, Colorado
80112 - 3938 USA
303 - 790 - 8606
800 - 688 - 8606
ASC ANTARCTIC SUPPORT CONTRACT

PROJECT NUMBER: 160604MCM010
FILE NAME: 160604MCM010M-102-RA
DESIGNED BY: JEE/CDF
DRAWN BY: MEB
DATE CHECKED: 09/23/16
SHEET TITLE: LEVEL 2 - MECHANICAL OVERALL PLAN
SHEET NUMBER: M-102

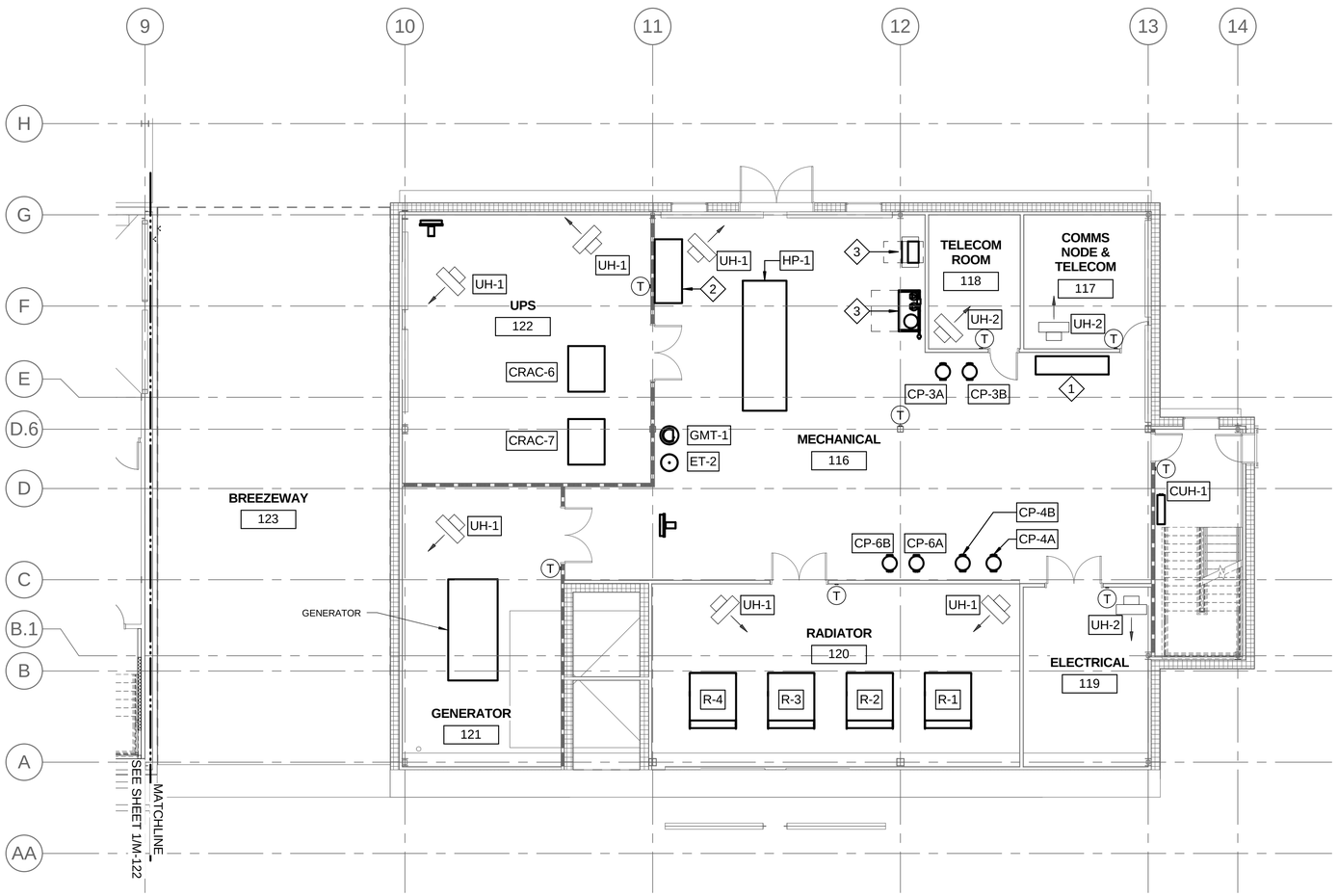

1 LEVEL 1 - HYDRONIC PLAN - AREA C

1/8" = 1'-0"

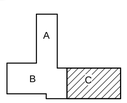

KEY PLAN

SHEET NOTES

1. FOR PIPING DIAGRAM, SEE 1/M-6XX.
2. FOR UNIT HEATER PIPING DIAGRAM, SEE 1/M-615.
3. FOR CABINET UNIT HEATER PIPING DIAGRAM, SEE 2/M-615.

SHEET KEY NOTES

1. ELECTRICAL PANEL AND VFD LOCATION.
2. FIRE SUPPRESSION TANK LOCATION, SEE FIRE PROTECTION.
3. HUMIDIFICATION EQUIPMENT LOCATION, SEE PLUMBING.

8 0 8 16
Scale: 1/8 INCH = 1 FOOT

PRELIMINARY DRAWING
FOR REVIEW ONLY - NOT FOR CONSTRUCTION

INCHES 1 2
CENTIMETERS 1 2 3 4 5 6

NATIONAL SCIENCE FOUNDATION
OFFICE OF POLAR PROGRAMS
WASHINGTON, D.C. NSF
CONTRACT OPP: 0000373

REVISION LOG

REV.	DATE	DESCRIPTION	DFTG.	APPD.
A	09/23/2016	30% DESIGN SUBMITTAL	MEB	CDF

MCMURDO STATION
BL010 - IT PRIMARY OPERATIONS FACILITY
MECHANICAL

7400 South Tucson Way
Centennial, Colorado
80112 - 3938 USA
303 - 790 - 8606
800 - 688 - 8606
ASC ANTARCTIC SUPPORT CONTRACT

PROJECT NUMBER: 160604MCM010
FILE NAME: 160604MCM010M-121-RA
DESIGNED BY: JEE/CDF
DRAWN BY: MEB
DATE CHECKED: 09/23/16
SHEET TITLE: LEVEL 1 - DATA CENTER - HYDRONIC
SHEET NUMBER: M-121

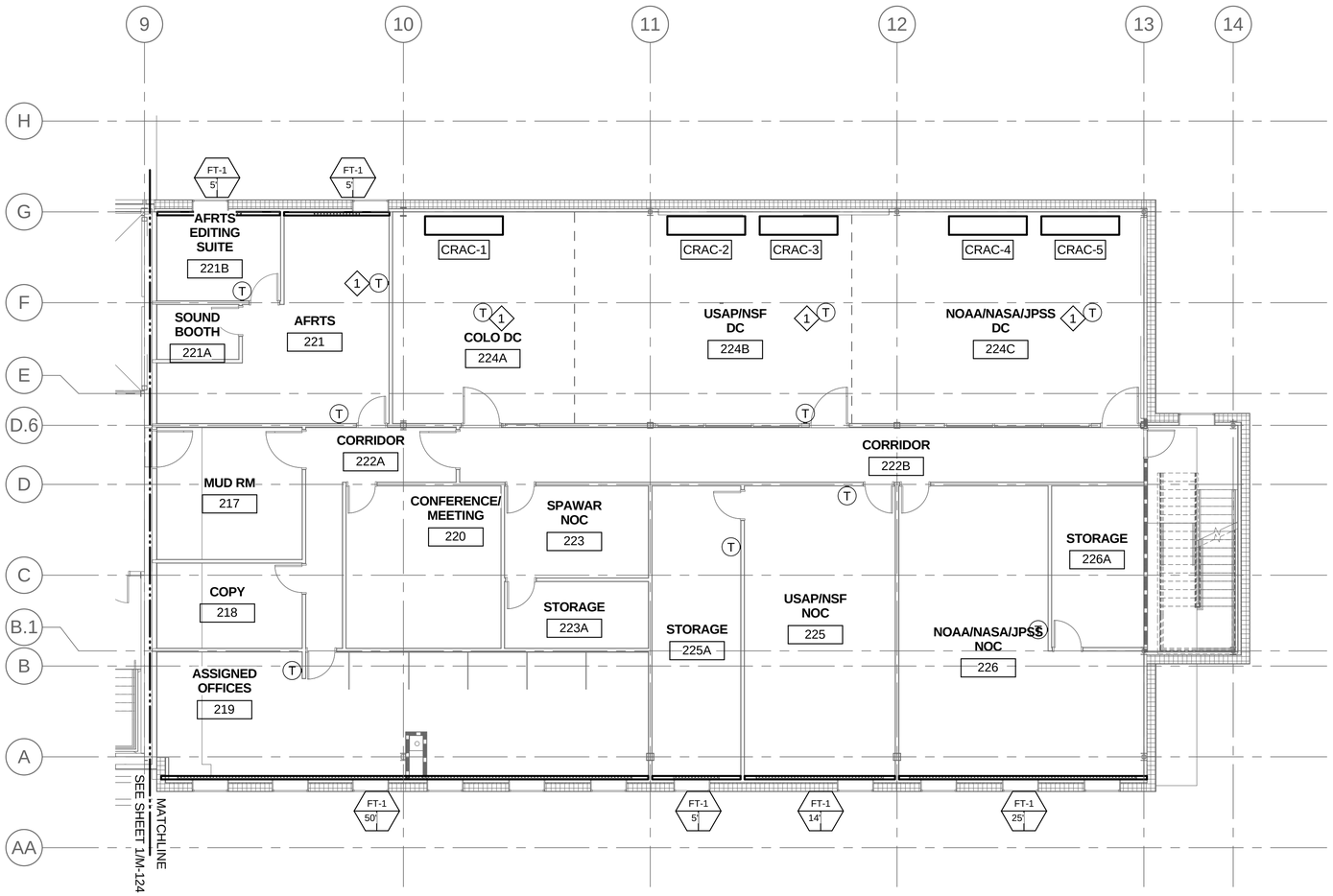

1 LEVEL 2 - HYDRONIC PLAN - AREA C

1/8" = 1'-0"

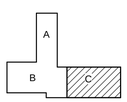

KEY PLAN

SHEET NOTES

1. FOR FINNED TUBE PIPING DIAGRAM, SEE 3/M-615.
2. FOR CRAC PIPING DIAGRAM, SEE X/M-XXX.

SHEET KEY NOTES

1. TEMP SENSOR LOCATED IN COLD DECK FOR MONITORING PURPOSES ONLY.

8 0 8 16
Scale: 1/8 INCH = 1 FOOT

PRELIMINARY DRAWING
FOR REVIEW ONLY - NOT FOR CONSTRUCTION

INCHES 1 2
CENTIMETERS 1 2 3 4 5 6

NATIONAL SCIENCE FOUNDATION
OFFICE OF POLAR PROGRAMS
WASHINGTON, D.C. NSF
CONTRACT OPP. 0000373

REVISION LOG

REV.	DATE	DESCRIPTION	DFTG.	APPD.
A	09/23/2016	30% DESIGN SUBMITTAL	MEB	CDF

MCMURDO STATION
BL010 - IT PRIMARY OPERATIONS FACILITY
MECHANICAL

7400 South Tucson Way
Centennial, Colorado
80112 - 3938 USA
303 - 790 - 8606
800 - 688 - 8606
ASC ANTARCTIC SUPPORT CONTRACT

PROJECT NUMBER: 160604MCM010
FILE NAME: 160604MCM010M-123-RA
DESIGNED BY: JEE/CDF
DRAWN BY: MEB
DATE CHECKED: 09/23/16
SHEET TITLE: LEVEL 2 - DATA CENTER - HYDRONIC
SHEET NUMBER: M-123

D C B A

1 2 3 4 5 6 7 8

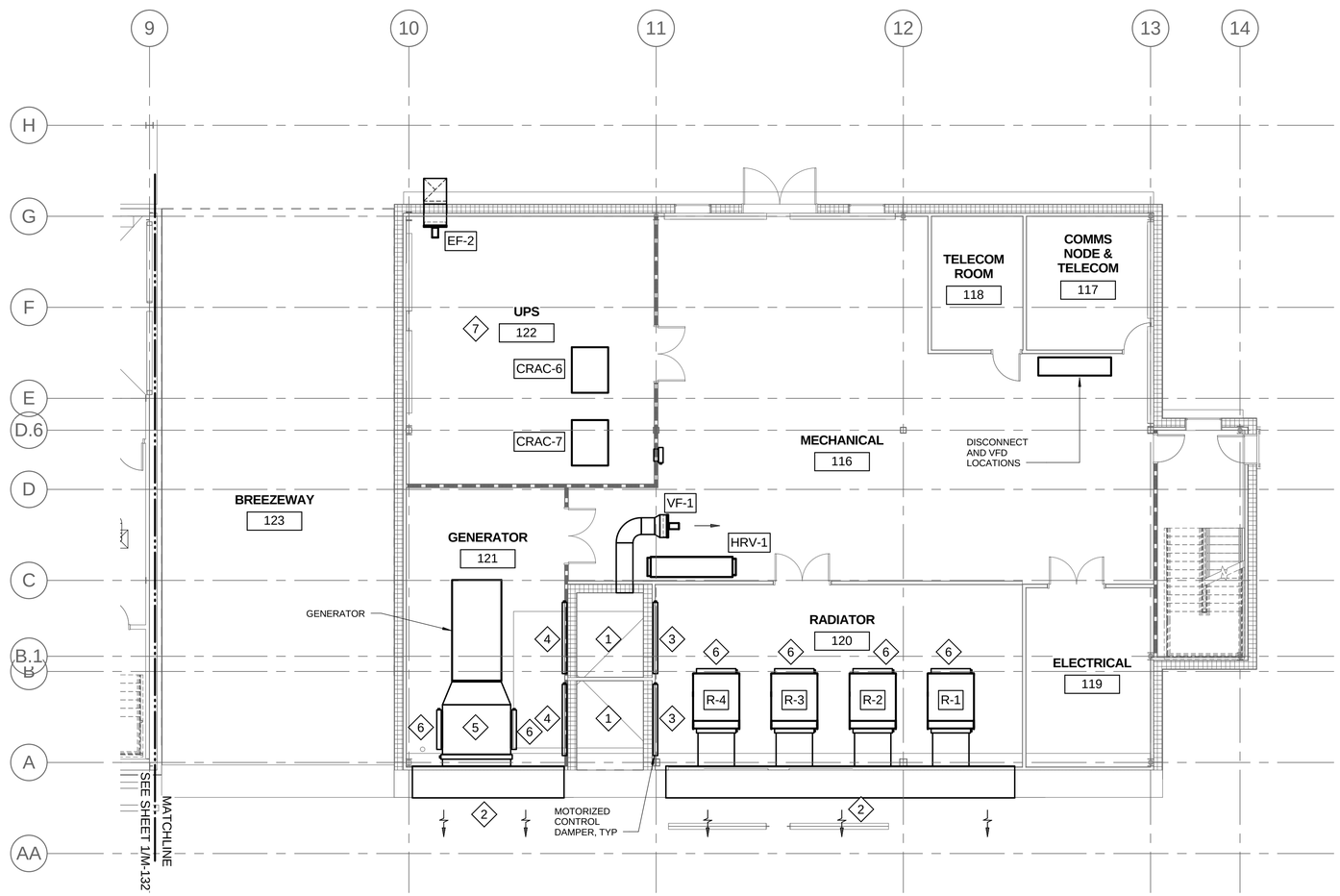

1 LEVEL 1 - VENTILATION PLAN - AREA C

1/8" = 1'-0"

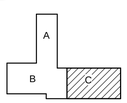

KEY PLAN

SHEET NOTES

1. FOR VENTILATION FAN DIAGRAM, SEE 3/M-621.
2. FOR HRV-1 SCHEMATIC, SEE 1/M-621.
3. FOR GENERATOR SCHEMATIC, SEE 4/M-621.
4. FOR RADIATOR SCHEMATIC, SEE 5/M-621.

SHEET KEY NOTES

1. OUTSIDE AIR INTAKE.
2. EXHAUST THROUGH EXTERIOR SOFFIT.
3. CONTROL DAMPER FROM OA PLENUM TO RADIATOR ROOM.
4. CONTROLLED 1 HR RATED FIRE DAMPER FROM OA PLENUM TO GENERATOR ROOM.
5. GENERATOR RADIATOR EXHAUST AND RETURN AIR DAMPERS.
6. CONTROL DAMPER TO ALLOW HEATED AIR TO TEMPER ROOM TEMPERATURE.
7. HYDROGEN SENSOR IN UPS ROOM PER IMC FOR BATTERY STORAGE.

Scale: 1/8 INCH = 1 FOOT

PRELIMINARY DRAWING
FOR REVIEW ONLY - NOT FOR CONSTRUCTION

INCHES 1 2
CENTIMETERS 1 2 3 4 5 6

NATIONAL SCIENCE FOUNDATION
OFFICE OF POLAR PROGRAMS
WASHINGTON, D.C. NSF
CONTRACT OPP. 0000373

REVISION LOG

REV.	DATE	DESCRIPTION	DFTG.	APPD.
A	09/23/2016	30% DESIGN SUBMITTAL	MEB	CDF

MCMURDO STATION
BL010 - IT PRIMARY OPERATIONS FACILITY
MECHANICAL

7400 South Tucson Way
Centennial, Colorado
80112 - 3938 USA
303 - 790 - 8606
800 - 688 - 8606

ASC ANTARCTIC SUPPORT CONTRACT

PROJECT NUMBER: 160604MCM010
FILE NAME: 160604MCM010M-131-RA
DESIGNED BY: JEE/CDF
DRAWN BY: MEB
DATE CHECKED: 09/23/16
SHEET TITLE: LEVEL 1 - DATA CENTER - VENTILATION
SHEET NUMBER: M-131

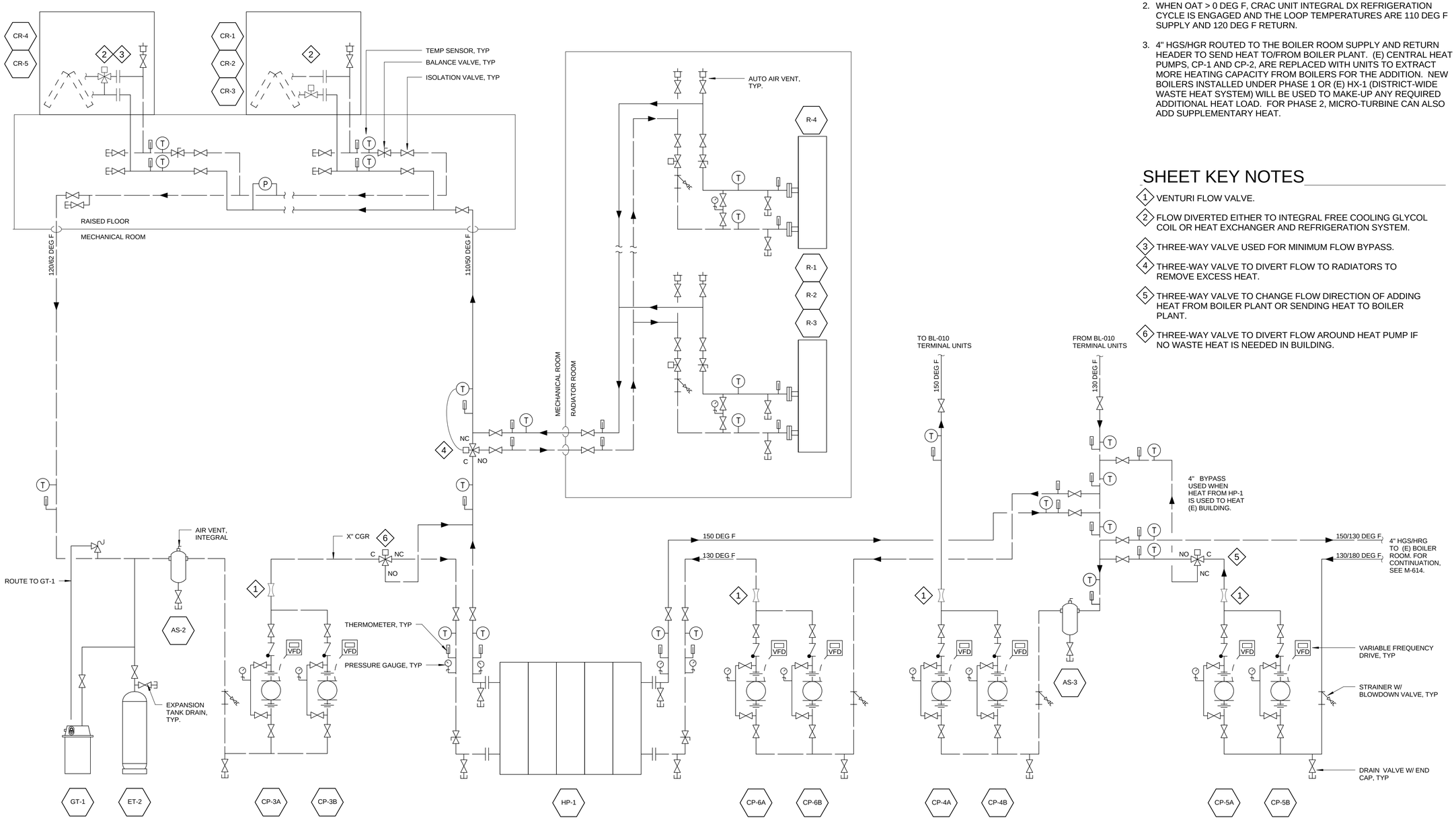

1 HYDRONIC SYSTEM DIAGRAM - LCCA OPTION 2

No Scale

SHEET NOTES

1. WHEN THE OAT < 0 DEG F, CRAC UNITS OPERATE ON ECONOMIZER MODE (CHILLED GLYCOL COIL) AND LOOP TEMPERATURES ARE 50 DEG F SUPPLY AND 62 DEG F RETURN.
2. WHEN OAT > 0 DEG F, CRAC UNIT INTEGRAL DX REFRIGERATION CYCLE IS ENGAGED AND THE LOOP TEMPERATURES ARE 110 DEG F SUPPLY AND 120 DEG F RETURN.
3. 4" HGS/HGR ROUTED TO THE BOILER ROOM SUPPLY AND RETURN HEADER TO SEND HEAT TO/FROM BOILER PLANT. (E) CENTRAL HEAT PUMPS, CP-1 AND CP-2, ARE REPLACED WITH UNITS TO EXTRACT MORE HEATING CAPACITY FROM BOILERS FOR THE ADDITION. NEW BOILERS INSTALLED UNDER PHASE 1 OR (E) HX-1 (DISTRICT-WIDE WASTE HEAT SYSTEM) WILL BE USED TO MAKE-UP ANY REQUIRED ADDITIONAL HEAT LOAD. FOR PHASE 2, MICRO-TURBINE CAN ALSO ADD SUPPLEMENTARY HEAT.

SHEET KEY NOTES

1. VENTURI FLOW VALVE.
2. FLOW DIVERTED EITHER TO INTEGRAL FREE COOLING GLYCOL COIL OR HEAT EXCHANGER AND REFRIGERATION SYSTEM.
3. THREE-WAY VALVE USED FOR MINIMUM FLOW BYPASS.
4. THREE-WAY VALVE TO DIVERT FLOW TO RADIATORS TO REMOVE EXCESS HEAT.
5. THREE-WAY VALVE TO CHANGE FLOW DIRECTION OF ADDING HEAT FROM BOILER PLANT OR SENDING HEAT TO BOILER PLANT.
6. THREE-WAY VALVE TO DIVERT FLOW AROUND HEAT PUMP IF NO WASTE HEAT IS NEEDED IN BUILDING.

INCHES 1 2
CENTIMETERS 1 2 3 4 5 6

NATIONAL SCIENCE FOUNDATION
OFFICE OF POLAR PROGRAMS
WASHINGTON, D.C. NSF
CONTRACT OPP. 0000373

REVISION LOG

REV.	DATE	DESCRIPTION	DFTG.	APPD.
A	09/23/2016	30% DESIGN SUBMITTAL	MEB	CDF

MCMURDO STATION
BL010 - IT PRIMARY OPERATIONS FACILITY
MECHANICAL

7400 South Tucson Way
Centennial, Colorado
80112 - 3938 USA
303 - 790 - 8606
800 - 688 - 8606
ASC ANTARCTIC SUPPORT CONTRACT

PROJECT NUMBER: 160604MCM010
FILE NAME: 160604MCM010M-612-RA
DESIGNED BY: JEE/CDF
DRAWN BY: MEB
DATE CHECKED: 09/23/16
SHEET TITLE: HYDRONIC SYSTEM DIAGRAM - LCCA OPTION 2
SHEET NUMBER: M-612

PRELIMINARY DRAWING
FOR REVIEW ONLY - NOT FOR CONSTRUCTION

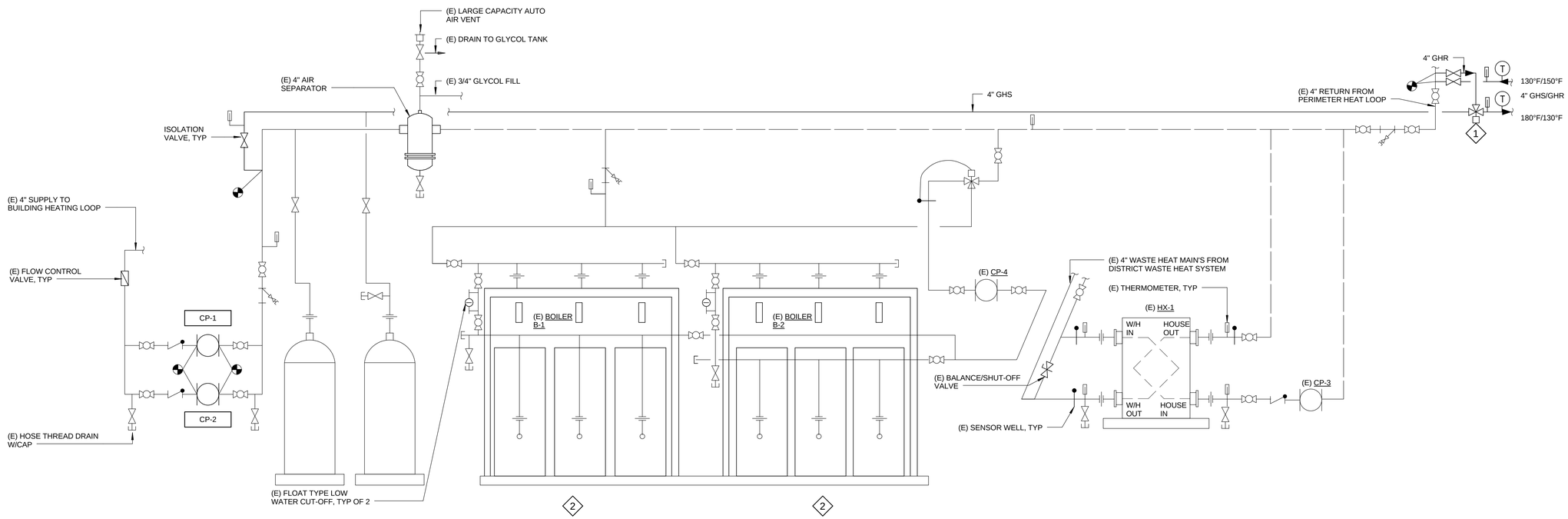

1 EXISTING BOILER ONE-LINE DIAGRAM

No Scale

SHEET NOTES

SHEET KEY NOTES

1. 3-WAY VALVE DIVERTS FLOW FROM SENDING HEAT TO DATA CENTER OR FROM DATA CENTER.
2. BOILERS TO BE REPLACED. MORE INFORMATION TO BE PROVIDED AT THE NEXT MILESTONE.

PRELIMINARY DRAWING
FOR REVIEW ONLY - NOT FOR CONSTRUCTION

INCHES 1 2
CENTIMETERS 1 2 3 4 5 6

NATIONAL SCIENCE FOUNDATION
OFFICE OF POLAR PROGRAMS
WASHINGTON, D.C. NSF
CONTRACT OPP. 0000373

REVISION LOG

REV.	DATE	DESCRIPTION	DFTG.	APPD.
A	09/23/2016	30% DESIGN SUBMITTAL	MEB	CDF

MCMURDO STATION
BL010 - IT PRIMARY OPERATIONS FACILITY
MECHANICAL

7400 South Tucson Way
Centennial, Colorado
80112 - 3938 USA
303 - 790 - 8606
800 - 688 - 8606
ASC ANTARCTIC SUPPORT CONTRACT

PROJECT NUMBER: 160604MCM010
FILE NAME: 160604MCM010M-614-RA
DESIGNED BY: JEE/CDF
DRAWN BY: MEB
DATE CHECKED: 09/23/16
SHEET TITLE: HYDRONIC BOILER DIAGRAM
SHEET NUMBER: M-614

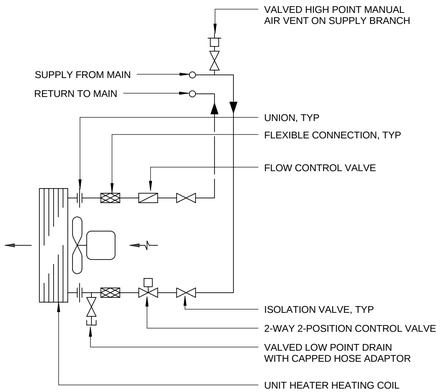

1 UNIT HEATER PIPING DIAGRAM
No Scale

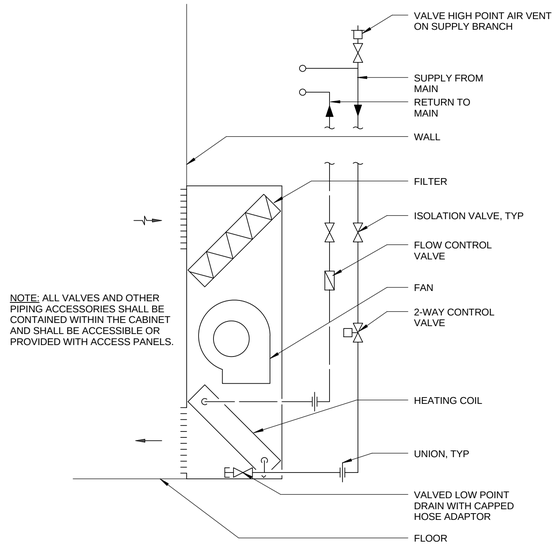

2 CABINET UNIT HEATER PIPING DIAGRAM
No Scale

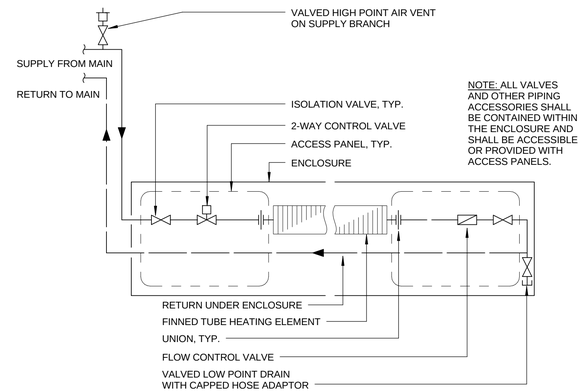

3 FINNED TUBE DIAGRAM
No Scale

PRELIMINARY DRAWING
FOR REVIEW ONLY - NOT FOR CONSTRUCTION

INCHES 1 2
CENTIMETERS 1 2 3 4 5 6

NATIONAL SCIENCE FOUNDATION
OFFICE OF POLAR PROGRAMS
WASHINGTON, D.C. NSF
CONTRACT OPP. 0000373

REVISION LOG

REV.	DATE	DESCRIPTION	DFTG.	APPD.
A	09/23/2016	30% DESIGN SUBMITTAL	MEB	CDF

MCMURDO STATION
BL010 - IT PRIMARY OPERATIONS FACILITY
MECHANICAL

7400 South Tucson Way
Centennial, Colorado
80112 - 3938 USA
303 - 790 - 8606
800 - 688 - 8606
ASC ANTARCTIC SUPPORT CONTRACT

PROJECT NUMBER: 160604MCM010
FILE NAME: 160604MCM010M-615-RA
DESIGNED BY: JEE/CDF
DRAWN BY: MEB
DATE CHECKED: 09/23/16
SHEET TITLE: HYDRONIC DIAGRAMS
SHEET NUMBER: M-615

1 2 3 4 5 6 7 8
D C B A

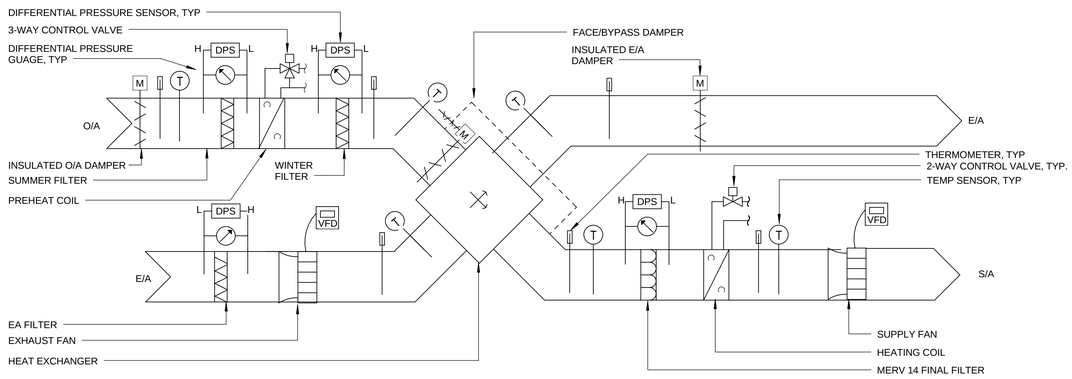

1 HRV-1 DIAGRAM
No Scale

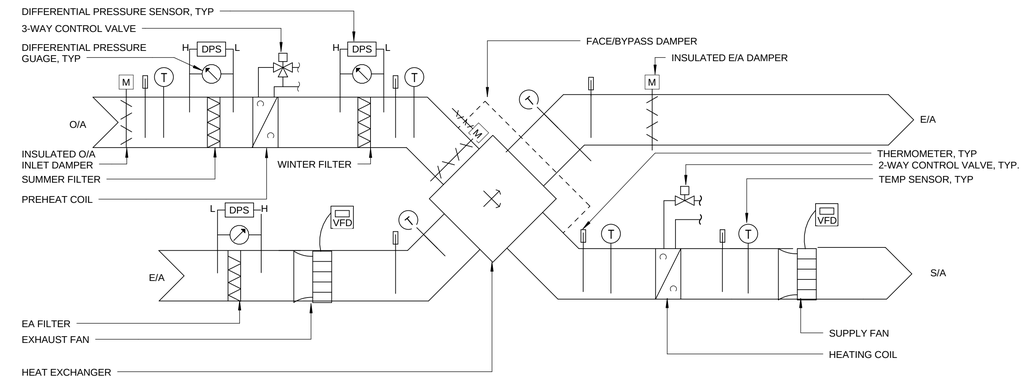

2 HRV-2 DIAGRAM
No Scale

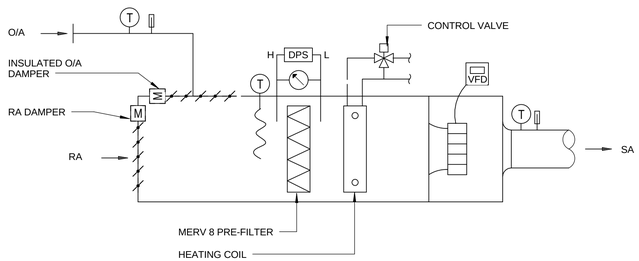

3 AHU-1 DIAGRAM
No Scale

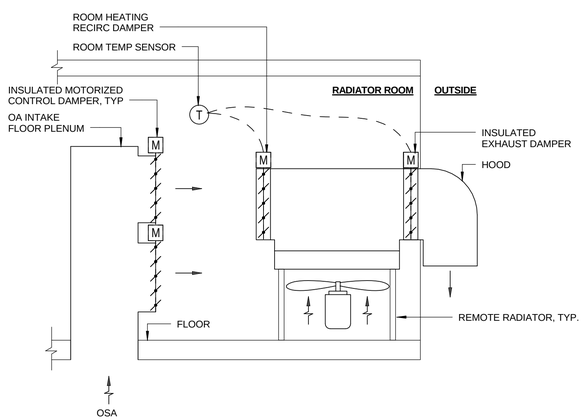

4 RADIATOR ROOM DIAGRAM
No Scale

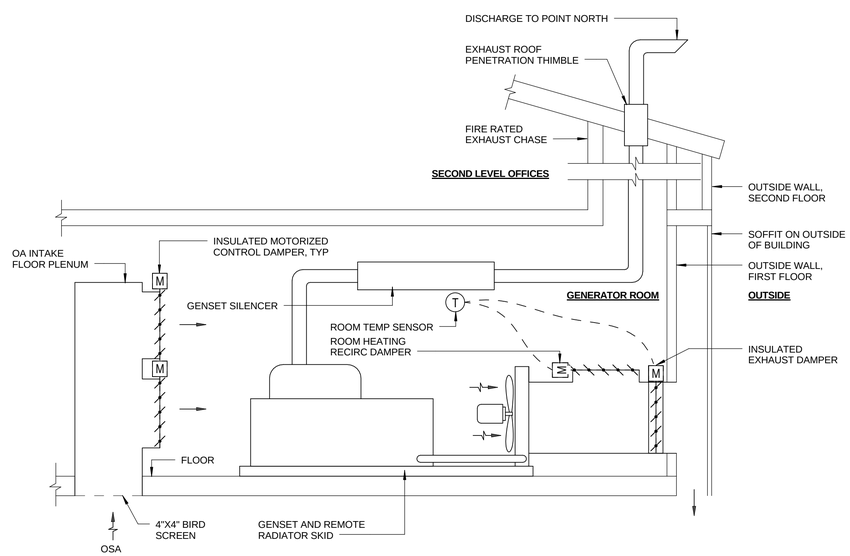

5 GENERATOR ROOM DIAGRAM
No Scale

PRELIMINARY DRAWING
FOR REVIEW ONLY - NOT FOR CONSTRUCTION

INCHES 1 2
CENTIMETERS 1 2 3 4 5 6

NATIONAL SCIENCE FOUNDATION
OFFICE OF POLAR PROGRAMS
WASHINGTON, D.C. NSF
CONTRACT OPP. 0000373

REVISION LOG

REV.	DATE	DESCRIPTION	DFTG.	APPD.
A	09/23/2016	30% DESIGN SUBMITTAL	MEB	CDF

MCMURDO STATION
BL010 - IT PRIMARY OPERATIONS FACILITY
MECHANICAL

7400 South Tucson Way
Centennial, Colorado
80112 - 3938 USA
303 - 790 - 8606
800 - 688 - 8606

ASC ANTARCTIC SUPPORT CONTRACT

PROJECT NUMBER: 160604MCM010
FILE NAME: 160604MCM010M-621-RA
DESIGNED BY: JEE/CDF
DRAWN BY: MEB
DATE CHECKED: 09/23/16
SHEET TITLE: VENTILATION DIAGRAMS
SHEET NUMBER: M-621

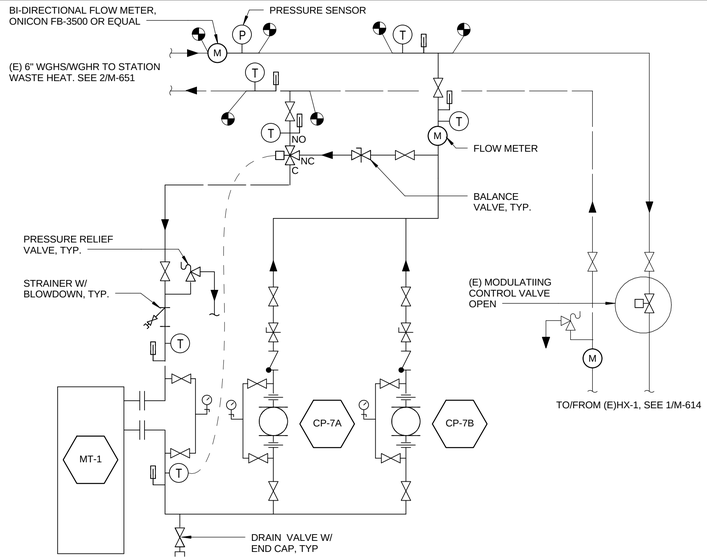

1 PIPING SCHEMATIC - HEAT SERVING BL010 SCENARIO

No Scale

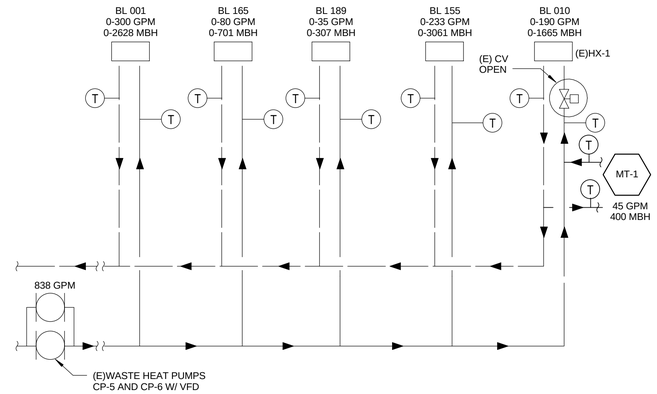

2 STATION WASTE HEAT DIAGRAM HEAT SERVING BL010

No Scale

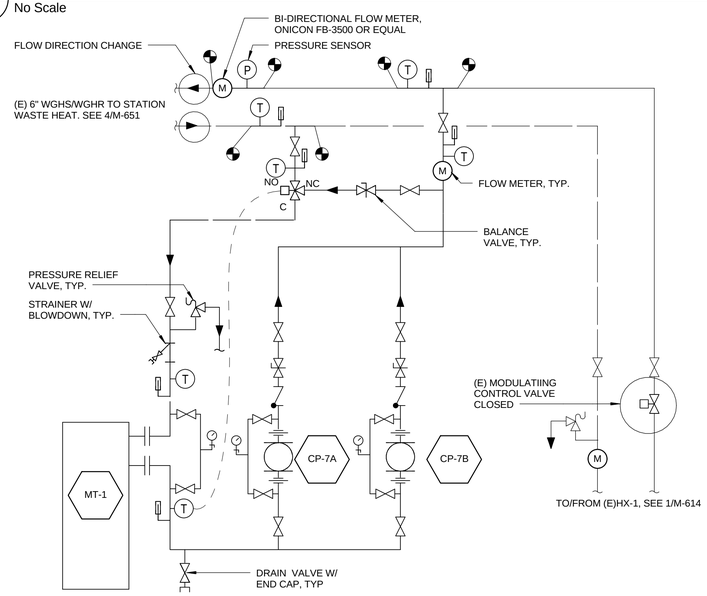

3 PIPING SCHEMATIC - WASTE HEAT INJECTION SCENARIO

No Scale

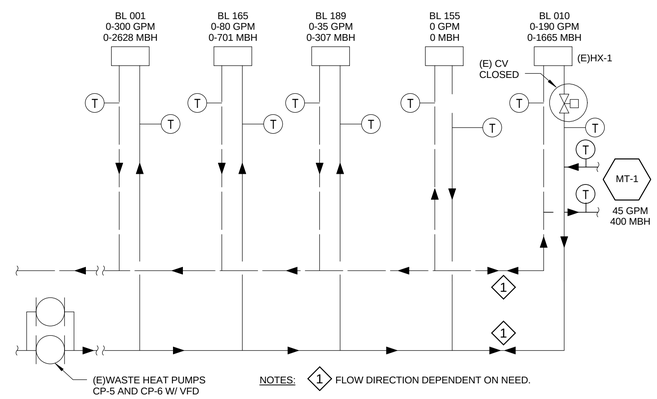

4 STATION WASTE HEAT DIAGRAM WASTE HEAT INJECTION

No Scale

ABBREVIATIONS

CO	CARBON MONOXIDE	IN	INCHES
(D)	DEMOLISH	L	LOUVER
DEMO	DEMOLISH	MISC	MISCELLANEOUS
DIA	DIAMETER	MT	MICRO-TURBINE
DT	DAY TANK	OA	OUTSIDE AIR
(E)	EXISTING	P	PUMP
EA	EXHAUST AIR	RA	RETURN AIR
EXIST	EXISTING	SA	SUPPLY AIR
FOR	FUEL OIL RETURN	TYP	TYPICAL
FOS	FUEL OIL SUPPLY	VF	VENTILATION FAN
FT	FEET	W/	WITH
GHR	GLYCOL HEATING RETURN	WGHR	WASTE HEAT GLYCOL RETURN
GHS	GLYCOL HEATING SUPPLY	WGHS	WASTE HEAT GLYCOL SUPPLY
HX	HEAT EXCHANGER		

PIPE FITTINGS & VALVES

ELBOW, TURNED DOWN
ELBOW, TURNED UP
TEE, OUTLET DOWN
TEE, OUTLET UP
FLOW DIRECTION
ISOLATION VALVE
POINT OF CONNECTION
CHECK VALVE
STRAINER W/ BLOWDOWN
BALANCE VALVE
MOTORIZED 2-WAY CONTROL VALVE
MOTORIZED 3-WAY CONTROL VALVE
RELIEF OR SAFETY VALVE
DRAIN ISOLATION VALVE AND HOSE ADAPTOR
UNION
FLANGE CONNECTION
FLOW METER
THERMOMETER
TEMP SENSOR
PRESSURE GAUGE W/ ISOLATION VALVE
PRESSURE SENSOR
PUMP - CIRC

PRELIMINARY DRAWING
FOR REVIEW ONLY - NOT FOR CONSTRUCTION

INCHES 1 2
CENTIMETERS 1 2 3 4 5 6

NATIONAL SCIENCE FOUNDATION
OFFICE OF POLAR PROGRAMS
WASHINGTON, D.C. NSF
CONTRACT OPP. 0000373

REVISION LOG

REV.	DATE	DESCRIPTION	DFTG.	APPD.
A	09/23/2016	30% DESIGN SUBMITTAL	MEB	CDF

MCMURDO STATION
BL010 - IT PRIMARY OPERATIONS FACILITY
MECHANICAL

7400 South Tucson Way
Centennial, Colorado
80112 - 3938 USA
303 - 790 - 8606
800 - 688 - 8606
ASC ANTARCTIC SUPPORT CONTRACT

PROJECT NUMBER: 160604MCM010
FILE NAME: 160604MCM010M-631-RA
DESIGNED BY: JEE/CDF
DRAWN BY: MEB
DATE CHECKED: 09/23/16
SHEET TITLE: MICROTURBINE DIAGRAMS
SHEET NUMBER: M-631

1 2 3 4 5 6 7 8
D C B A

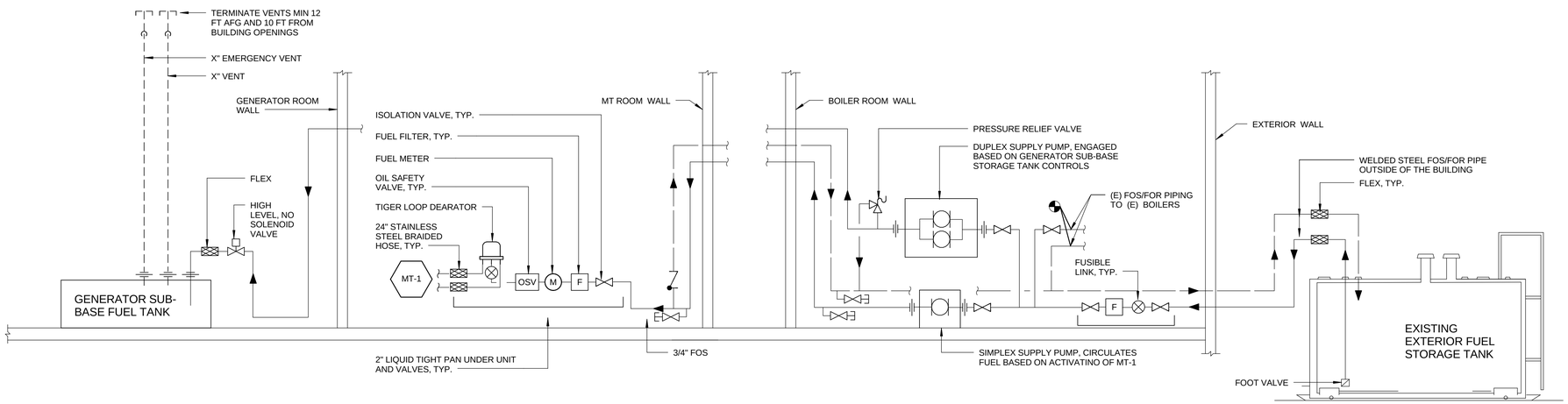

1 FUEL OIL SYSTEM DIAGRAM

No Scale

ABBREVIATIONS

CO	CARBON MONOXIDE	IN	INCHES
(D)	DEMOLISH	L	LOUVER
DEMO	DEMOLISH	MISC	MISCELLANEOUS
DIA	DIAMETER	MT	MICRO-TURBINE
DT	DAY TANK	OA	OUTSIDE AIR
(E)	EXISTING	P	PUMP
EA	EXHAUST AIR	RA	RETURN AIR
EXIST	EXISTING	SA	SUPPLY AIR
FOR	FUEL OIL RETURN	TYP	TYPICAL
FOS	FUEL OIL SUPPLY	VF	VENTILATION FAN
FT	FEET	W/	WITH
GHR	GLYCOL HEATING RETURN	WGHR	WASTE HEAT GLYCOL RETURN
GHS	GLYCOL HEATING SUPPLY	WGHS	WASTE HEAT GLYCOL SUPPLY
HX	HEAT EXCHANGER		

FUEL OIL

- FUEL OIL SUPPLY
- FUEL OIL RETURN
- FUSIBLE LINK
- FILTER (F)
- OIL SAFETY VALVE (OSV)

PIPE FITTINGS & VALVES

- ELBOW, TURNED DOWN
- ELBOW, TURNED UP
- TEE, OUTLET DOWN
- TEE, OUTLET UP
- FLOW DIRECTION
- ISOLATION VALVE
- POINT OF CONNECTION
- CHECK VALVE
- STRAINER W/ BLOWDOWN
- BALANCE VALVE
- MOTORIZED 2-WAY CONTROL VALVE
- MOTORIZED 3-WAY CONTROL VALVE
- RELIEF OR SAFETY VALVE
- DRAIN ISOLATION VALVE AND HOSE ADAPTOR
- UNION
- FLANGE CONNECTION
- FLOW METER (M)
- THERMOMETER
- TEMP SENSOR (T)
- PRESSURE GAUGE W/ ISOLATION VALVE
- PRESSURE SENSOR (P)
- PUMP - CIRC

PRELIMINARY DRAWING
FOR REVIEW ONLY - NOT FOR CONSTRUCTION

INCHES 1 2
CENTIMETERS 1 2 3 4 5 6

NATIONAL SCIENCE FOUNDATION
OFFICE OF POLAR PROGRAMS
WASHINGTON, D.C. NSF
CONTRACT OPP. 0000373

REVISION LOG

REV.	DATE	DESCRIPTION	DFTG.	APPD.
A	09/23/2016	30% DESIGN SUBMITTAL	MEB	CDF

MCMURDO STATION
BL010 - IT PRIMARY OPERATIONS FACILITY
MECHANICAL

7400 South Tucson Way
Centennial, Colorado
80112 - 3938 USA
303 - 790 - 8606
800 - 688 - 8606
ASC ANTARCTIC SUPPORT CONTRACT

PROJECT NUMBER: 160604MCM010
FILE NAME: 160604MCM010M-641-RA
DESIGNED BY: JEE/CDF
DRAWN BY: MEB
DATE CHECKED: 09/23/16
SHEET TITLE: FUEL OIL SYSTEM DIAGRAM
SHEET NUMBER: M-641

ELECTRICAL DEVICE LEGEND

SYMBOLS	RECEPTACLE DESCRIPTION
	NOTE: MULTIPLE RECEPTACLE DESIGNATIONS MAY BE ADJACENT TO DEVICE OR SEPARATED BY COMMAS (EXAMPLE: A, L6-30R, 13).
	DUPLEX RECEPTACLE. UNLESS NOTED OTHERWISE, RECEPTACLES ARE FLUSH MTD, 20A,125V,1PH, 2P, 3W, NEMA 5-20R, MH 1'-6" AFF TO CENTER. SEE RECEPTACLE DESIGNATIONS BELOW FOR NOTES AND OTHER REQUIREMENTS.
	TWO DUPLEX RECEPTACLE MOUNTED IN A TWO GANG BOX. UNLESS NOTED OTHERWISE, RECEPTACLES ARE FLUSH MTD, 20A,125V,1PH, 2P, 3W, NEMA 5-20R, MH 1'-6" AFF TO CENTER. SEE RECEPTACLE DESIGNATIONS BELOW FOR NOTES AND OTHER REQUIREMENTS.
	SIMPLEX RECEPTACLE. UNLESS NOTED OTHERWISE, RECEPTACLES ARE FLUSH MTD, 20A,125V,1PH, 2P, 3W, NEMA 5-20R, MH 1'-6" AFF TO CENTER. SEE RECEPTACLE DESIGNATIONS BELOW FOR NOTES AND OTHER REQUIREMENTS.
	SIMPLEX RECEPTACLE ON UPS POWER. UNLESS NOTED OTHERWISE, RECEPTACLES ARE FLUSH MTD, 20A,125V,1PH, 2P, 3W, NEMA 5-20R, MH 1'-6" AFF TO CENTER. SEE RECEPTACLE DESIGNATIONS BELOW FOR NOTES AND OTHER REQUIREMENTS.
	DUPLEX RECEPTACLE ON UPS POWER. UNLESS NOTED OTHERWISE, RECEPTACLES ARE FLUSH MTD, 20A,125V,1PH, 2P, 3W, NEMA 5-20R, MH 1'-6" AFF TO CENTER. SEE RECEPTACLE DESIGNATIONS BELOW FOR NOTES AND OTHER REQUIREMENTS.
	SIMPLEX RECEPTACLE ON STANDBY POWER. UNLESS NOTED OTHERWISE, RECEPTACLES ARE FLUSH MTD, 20A,125V,1PH, 2P, 3W, NEMA 5-20R, MH 1'-6" AFF TO CENTER. SEE RECEPTACLE DESIGNATIONS BELOW FOR NOTES AND OTHER REQUIREMENTS.
	DUPLEX RECEPTACLE ON STANDBY POWER. UNLESS NOTED OTHERWISE, RECEPTACLES ARE FLUSH MTD, 20A,125V,1PH, 2P, 3W, NEMA 5-20R, MH 1'-6" AFF TO CENTER. SEE RECEPTACLE DESIGNATIONS BELOW FOR NOTES AND OTHER REQUIREMENTS.
	3 PHASE 250V SPECIAL PURPOSE RECEPTACLE. SEE RECEPTACLE DESIGNATIONS BELOW FOR NOTES AND OTHER REQUIREMENTS.
	3 PHASE 480V SPECIAL PURPOSE RECEPTACLE. SEE RECEPTACLE DESIGNATIONS BELOW FOR NOTES AND OTHER REQUIREMENTS.
	DENOTES SURFACE MOUNTED DEVICE.

DESIGNATION	RECEPTACLE DESIGNATION
3	CIRCUIT NUMBER (3 IN THIS EXAMPLE)
A	DENOTES RECEPTACLE FOR WHICH LOCATION AND MOUNTING ARRANGEMENT IS SHOWN ON ARCHITECTURAL DRAWINGS.
L6-30R	SPECIAL PURPOSE RECEPTACLE TYPE (TYPE L6-30R IN THIS EXAMPLE). SEE SPECIAL PURPOSE RECEPTACLE SCHEDULE.
WP	GFCI TYPE, WEATHERPROOF WITH HINGED COVER.
WP-WIN	GFCI TYPE, WEATHERPROOF WITH WHILE-IN-USE COVER
L	PAD LOCKABLE COVER
GF	GFCI TYPE, WIRED FOR GFCI TRIP FOR DESIGNATED RECEPTACLE ONLY.
G	GFCI TYPE, WIRED FOR GFCI PROTECTION OF RCPT AND ALL RCPT'S ON SAME CIRCUIT, UNLESS NOTED OTHERWISE RECEPTACLE ONLY.
H50	DENOTES MOUNTING HEIGHT IN INCHES ABOVE FINISHED FLOOR TO CENTER; 50" AFF IN THIS EXAMPLE.
C6	DENOTES MOUNTING HEIGHT IN INCHES ABOVE COUNTER TO CENTER; 6" ACT IN THIS EXAMPLE. SEE ARCHITECTURAL PLANS FOR COUNTER TOP LOCATION.
CW	DENOTES RECEPTACLE LOCATED WITHIN CASEWORK. COORDINATE LOCATION WITH ARCHITECTURAL CASEWORK DETAILS AND VERIFY LOCATION WITH OWNER'S REPRESENTATIVE.
V	VERIFY EXACT LOCATION AND HEIGHT WITH OWNER'S REPRESENTATIVE PRIOR TO INSTALLATION.
T	TELECOMMUNICATION EQUIPMENT RECEPTACLE, MOUNT HEIGHT 8" AFF, UNLESS NOTED OTHERWISE.
*	COORDINATE MOUNTING HEIGHT AND EXACT LOCATION WITH EQUIPMENT SERVED BY RECPT, AND ALL OTHER WORK IN VICINITY OF RECPT. SEE PANEL SCHEDULE FOR EQPT DESIGNATION.
IG	ISOLATED GROUND TYPE RECEPTACLE.
SS	TVSS TYPE RECEPTACLE.
SW	SWITCHED RECEPTACLE CONTROLLED BY ROOM OCCUPANCY DEVICE
TR	TAMPER RESISTANT TYPE RECEPTACLE.
TV	TELEVISION RECEPTACLE TYPE RECEPTACLE; COORDINATE MOUNTING HEIGHT AND EXACT LOCATION WITH OWNER'S REPRESENTATIVE PRIOR TO INSTALLATION.
P	CEILING MOUNTED PROJECTOR RECEPTACLE.

POWER DISTRIBUTION / EQUIPMENT LEGEND

SYMBOLS	DESCRIPTION
	FLOOR OR SURFACE MOUNTED MAIN LUG ONLY PANELBOARD. WHERE CONCRETE PAD SHOWN, PROVIDE 2" THICK CONCRETE PAD, 4" OFFSET FROM ENCLOSURE FRONT AND SIDES, 4" OFFSET FROM ENCLOSURE BACK.
	FLOOR OR SURFACE MOUNTED MAIN PROTECTIVE DEVICE PANELBOARD.
	RECESSED MAIN LUG ONLY PANELBOARD.
	RECESSED MOUNTED MAIN PROTECTIVE DEVICE PANELBOARD. WHERE CONCRETE PAD SHOWN, PROVIDE 4" THICK CONCRETE PAD, 4" OFFSET FROM ENCLOSURE FRONT AND SIDES, 6" OFFSET FROM ENCLOSURE BACK.
	DRY TYPE TRANSFORMER WITH NEMA 2 ENCLOSURE, UNLESS INDICATED OTHERWISE. SEE TRANSFORMER SCHEDULE FOR ADDITIONAL REQUIREMENTS.
50 EF-01	MOTOR EQUIPMENT IDENTIFICATION AND HORSEPOWER AS INDICATED. DISCONNECT AND/OR STARTER IS NOT FURNISHED WITH MOTOR EQUIPMENT.
50 KVA EF-01	PACKAGED EQUIPMENT IDENTIFICATION AND KILOVOLT-AMPERE AS INDICATED. PACKAGED EQUIPMENT IS FURNISHED WITH LOCAL DISCONNECT AND IS A SINGLE POINT CONNECTION.
	FUSED DISCONNECT / SAFETY SWITCH. SEE SINGLE LINE LEGEND FOR ADDITIONAL REQUIREMENTS AND SINGLE LINE DRAWINGS FOR SWITCH / FUSE RATINGS NOT SHOWN ON PLANS.
	NON-FUSED DISCONNECT / SAFETY SWITCH. SEE SINGLE LINE LEGEND FOR ADDITIONAL REQUIREMENTS AND SINGLE LINE DRAWINGS FOR SWITCH RATINGS NOT SHOWN ON PLANS.
	COMBINATION STARTER DISCONNECT / SAFETY SWITCH. SEE SINGLE LINE LEGEND FOR ADDITIONAL REQUIREMENTS AND SINGLE LINE DRAWINGS FOR SWITCH / STARTER RATINGS NOT SHOWN ON PLANS.
	STARTER. SEE SINGLE LINE LEGEND FOR ADDITIONAL REQUIREMENTS AND SINGLE LINE DRAWINGS FOR SWITCH / STARTER RATINGS NOT SHOWN ON PLANS.
30A/3P	CIRCUIT BREAKER, LOCKABLE IN OPEN POSITION, INDIVIDUALLY MOUNTED, NEMA 1 ENCLOSURE. IN THIS EXAMPLE, 30 A/3P DENOTES 30 AMPERE, 3 POLE. SEE SINGLE LINE LEGEND FOR RATINGS IF NOT INDICATED ON PLANS. VOLTAGE RATINGS SHALL BE NO LESS THAN APPLIED CIRCUIT VOLTAGE.
CTL	CONTROL PANEL.
J	JUNCTION BOX. UNLESS NOTED OTHERWISE, JUNCTION BOX IS FLUSH MOUNTED WITH COVER PLATE, SIZE IAW NEC AND EQPT MFR INSTRUCTIONS.
J	JUNCTION BOX. UNLESS NOTED OTHERWISE, JUNCTION BOX IS SURFACE MOUNTED WITH COVER PLATE, SIZE IAW NEC AND EQPT MFR INSTRUCTIONS.
PT A	FLUSH FLOOR TYPE POKE THRU. INSTALL PER MFR INSTRUCTION. ALPHANUMERIC DESIGNATION INDICATES TYPE, SEE POKE THRU SCHEDULE.
FB A	FLUSH FLOOR TYPE FLOOR BOX. INSTALL PER MFR INSTRUCTION. ALPHANUMERIC DESIGNATION INDICATES TYPE, SEE FLOOR BOX SCHEDULE.
SMR	HORIZONTAL SURFACE MOUNTED SURFACE METAL RACEWAY (SMR), ALUMINUM TYPE WIREMOLD ALA4800 SERIES WITH DIVIDER & COVER. BOTTOM OF SMR MOUNTED 6" ABOVE LABORATORY BENCH, UNLESS INDICATED OTHERWISE.
	VERTICAL SURFACE MOUNTED SURFACE METAL RACEWAY, TYPE MATCHING HORIZONTAL, STUB-UP 6" ABOVE FINISHED CEILING.
HW	HARDWIRED EQUIPMENT CONNECTION, COORDINATE EXACT LOCATION WITH EQUIPMENT SERVED.
U A	POWER POLE, LENGTH AS REQUIRED TO EXTEND ABOVE CEILING; RECEPTACLE TYPES AS INDICATED PER RECEPTACLE TYPE INDICATED ON ELECTRICAL DEVICE AND/OR TELECOMMUNICATIONS LEGEND. SHADED AREA DENOTES TELECOMMUNICATION RACEWAY. ALPHANUMERIC DESIGNATION INDICATES TYPE.

DESIGNATION	DEVICE DESIGNATION
*	MOUNTING HEIGHT AND/OR MOUNTING TO BE COORDINATED WITH WORK AND EQUIPMENT AT JUNCTION BOX LOCATION PROVIDED UNDER DIVISION 26 AND ALL OTHER DIVISIONS.
C	MOUNTING ABOVE CEILING.

SURGE PROTECTIVE DEVICE (SPD) SCHEDULE

MINIMUM SURGE CURRENT (ANSI/IEEE C62.41 LOCATION CATEGORY)					VOLTAGE PROTECTION MODES / RATINGS (UL 1449 3RD EDITION)						
					ELECTRICAL SYSTEM CONFIGURATION	< 300 VOLTS (L-L)		< 500 VOLTS (L-L)		< 601 VOLTS (L-L)	
UL 1449 TYPE	CATEGORY	APPLICATION	PER PHASE	PER MODE		L-N / L-G / N-G	L-L	L-N / L-G / N-G	L-L	L-N / L-G / N-G	L-L
1	C	SERVICE ENTRANCE LOCATIONS	250 kA	125 kA	WYE	700	1200	1200	2000	1500	3000
					DELTA	N/A	1200	N/A	2000	N/A	3000
2	B	HIGH EXPOSURE ROOF TOP LOCATIONS	160 kA	80 kA	WYE	700	1200	1200	2000	1500	3000
					DELTA	N/A	1200	N/A	2000	N/A	3000
2	A	BRANCH CIRCUIT LOCATIONS	120 kA	60 kA	WYE	700	1200	1200	2000	1500	3000
					DELTA	N/A	1200	N/A	2000	N/A	3000

ELECTRICAL AREA CLASSIFICATION LEGEND

SYMBOL	DESCRIPTION
	CLASS 1, DIVISION 1
	CLASS 1, DIVISION 2
	CLASS 2, DIVISION 1
	CLASS 2, DIVISION 2
	CLASS 3, DIVISION 1
	CLASS 3, DIVISION 2
T1 / 450°C 842°F / G	DENOTES EQUIPMENT TEMPERATURE CLASS (T-CODE OR NEC LIMITING CONDITIONS) • T## - GENERAL NOTE 1. • O.L. - GENERAL NOTE 2. • N.O.L. - GENERAL NOTE 3. DENOTES MATERIAL GROUP CLASSIFICATION (GROUP A,B,C,D,E,F,G); '-' DENOTES NOT APPLICABLE. DENOTES MAXIMUM SURFACE TEMPERATURE OF ENERGIZED EQUIPMENT, DEVICES, OR LUMINIARIES FOR THE HAZARDOUS AREA INDICATED.

ELECTRICAL EQUIPMENT NOMENCLATURE

A- L D 2 B 1
(EXAMPLE)

WHERE INDICATED, NUMERIC DESIGNATION DENOTES SECTION NUMBER.

ALPHANUMERIC CHARACTER DENOTING SEQUENCE NUMBER (A,B,C,ETC).

SINGLE ALPHANUMERIC CHARACTER DENOTING FLOOR OR BUILDING AS FOLLOWS:
- 1 - FIRST FLOOR.
- 2 - SECOND FLOOR.
- 3 - MEZZANINE.
- 4 - ROOF.

WHERE APPLICABLE, SINGLE ALPHANUMERIC CHARACTER DENOTING PANELBOARD TYPE.
- D - DISTRIBUTION.
- M - MAIN DISTRIBUTION.
- P - POWER.

SINGLE OR DOUBLE ALPHANUMERIC CHARACTER DENOTING EQUIPMENT TYPE DESIGNATION, AS FOLLOWS:
- E - EMERGENCY (LIFE SAFETY).
- L - LIGHTING.
- M - MECHANICAL.
- R - RECEPTACLE.
- P - POWER.
- S - STANDBY.
- U - UPS.

WHERE APPLICABLE, SINGLE TO TRIPLE ALPHANUMERIC CHARACTER DENOTING EQUIPMENT TYPE MODIFIER, AS FOLLOWS:
- A - AUTOMATIC TRANSFER SWITCH.
- MCC - MOTOR CONTROL CENTER.
- SS - SUBSTATION
- T - TRANSFORMER

GENERAL NOTES

1. COMPLY WITH NFPA 70, NATIONAL ELECTRICAL CODE 2014 EDITION; NECA 1, STANDARD FOR GOOD WORKMANSHIP IN ELECTRICAL CONSTRUCTION; AND NATIONAL ELECTRICAL SAFETY CODE.
2. ELECTRICAL COMPONENTS, DEVICES, ASSEMBLIES, AND ACCESSORIES ARE REQUIRED TO BE LISTED AND LABELED AS DEFINED IN NFPA 70, ARTICLE 100, BY A TESTING AGENCY ACCEPTABLE TO AUTHORITIES HAVING JURISDICTION, AND MARKED FOR INTENDED USE.
3. DRAWINGS SHOW THE GENERAL LOCATIONS OF THE ELECTRICAL FEATURES ONLY, UNLESS OTHERWISE INDICATED. MAKE MINOR RELOCATIONS AS REQUIRED FOR PROJECT CONDITIONS WHEN NECESSARY TO PRESENT SYMMETRICAL APPEARANCE OR TO AVOID INTERFERENCE WITH OTHER INSTALLATIONS.
4. NEUTRAL CONDUCTORS SHALL NOT BE SHARED BETWEEN BRANCH CIRCUITS, UNLESS OTHERWISE INDICATED.
5. PROVIDE INSULATED EQUIPMENT GROUNDING CONDUCTORS WITH ALL FEEDERS AND BRANCH CIRCUITS. TERMINATE EACH END ON SUITABLE LUG, BUS OR BUSHING. SIZE EQUIPMENT GROUNDING CONDUCTORS IN ACCORDANCE WITH NEC, UNLESS OTHERWISE INDICATED, BUT NOT SMALLER THAN NO. 12 AWG.
6. MINIMUM CONDUCTOR SIZE FOR BRANCH CIRCUITS: NO. 12 AWG.
   - USE NO. 10 AWG MINIMUM FOR 15 OR 20 AMPERE, 120 VOLT BRANCH CIRCUITS LONGER THAN 65 FEET, BUT NOT GREATER THAN 100 FEET.
   - USE NO. 8 AWG MINIMUM FOR 15 OR 20 AMPERE, 120 VOLT BRANCH CIRCUITS LONGER THAN 100 FEET UNLESS OTHERWISE INDICATED.
   - USE NO. 10 AWG MINIMUM FOR 15 OR 20 AMPERE, 277 VOLT BRANCH CIRCUITS LONGER THAN 150 FEET UNLESS OTHERWISE INDICATED.
7. PROVIDE ACOUSTICAL SEAL FOR THE OUTLET AND DEVICE BOXES[, SEE ARCHITECTURAL DRAWINGS FOR ADDITIONAL INFORMATION]. OUTLET AND DEVICE BOXES LOCATED BACK TO-BACK ON A COMMON WALL ARE REQUIRED TO BE MOUNTED IN SEPARATE STUD SPACES. THE REQUIRED DEVICE AND OUTLET BOXES INCLUDE BUT ARE NOT LIMITED TO SWITCHES, RECEPTACLES, TELECOMMUNICATION OUTLETS, AND HORN/STROBES.
8. OUTLET AND DEVICE BOXES FOR USE WITH EXPOSED RACEWAY SYSTEMS SHALL BE THREADED HUB, CAST METAL TYPE.

PRELIMINARY DRAWING
FOR REVIEW ONLY - NOT FOR CONSTRUCTION

INCHES 1 2
CENTIMETERS 1 2 3 4 5 6

NATIONAL SCIENCE FOUNDATION
OFFICE OF POLAR PROGRAMS
WASHINGTON, D.C. NSF
CONTRACT OPP. 0000373

REVISION LOG

REV.	DATE	DESCRIPTION	DFTG.	APPD.
A	09/23/2016	30% DESIGN SUBMITTAL	JDS	RDP

MCMURDO STATION
BL010 - IT PRIMARY OPERATIONS FACILITY
ELECTRICAL

7400 South Tucson Way
Centennial, Colorado
80112 - 3938 USA
303 - 790 - 8606
800 - 688 - 8606
ASC ANTARCTIC SUPPORT CONTRACT

PROJECT NUMBER: 160604MCM010
FILE NAME: 160604MCM010E-001-RA
DESIGNED BY: BGJ
DRAWN BY: JDS
DATE CHECKED: 09/23/2016
SHEET TITLE: LEGEND
SHEET NUMBER: E-001

SWITCHING DEVICE LEGEND

SYMBOLS	SWITCHING DEVICE DESCRIPTION
	NOTE: WHERE SUBSCRIPT DESIGNATIONS ARE INDICATED ADJACENT TO DEVICE, SEE SWITCHING DEVICE SUBSCRIPT DESIGNATIONS BELOW FOR ADDITIONAL REQUIREMENTS.
	WHERE USED; LOWER CASE LETTER SUBSCRIPT DENOTES FIXTURES CONTROLLED BY SWITCH, IF NOT INDICATED BY WIRING ARRANGEMENT ON PLANS. WHERE USED AS A DISCONNECT SWITCH, COORDINATE LOCATION AND MOUNTING WITH RELATED EQUIPMENT; COMPLY WITH NEC AND EQUIPMENT MANUFACTURER'S WRITTEN INSTRUCTIONS.
$	TOGGLE SWITCH, SINGLE POLE, 20A, 120-277V, UNLESS DENOTED OTHERWISE.
	WHERE INDICATED, DENOTES SURFACE MOUNTED DEVICE.
3a,3b,c	WHERE MULTIPLE SUBSCRIPT DESIGNATIONS ARE INDICATED, SEE SWITCHING DEVICE SUBSCRIPT DESIGNATIONS BELOW FOR ADDITIONAL REQUIREMENTS.
$3G	MULTI-GANG BOX WITH MULTIPLE TOGGLE SWITCHES, SINGLE POLE, 20A, 120-277V, UNLESS DENOTED OTHERWISE. IN THIS EXAMPLE, '3G' DENOTES THREE TOGGLE SWITCHING DEVICES MOUNTED IN A THREE GANG BOX.
	WHERE INDICATED, DENOTES SURFACE MOUNTED DEVICE.

DESIGNATION	SWITCHING DEVICE SUBSCRIPT DESIGNATION
3	THREE WAY.
4	FOUR WAY.
D	WALL DIMMER.
DP	DOUBLE POLE.
EP	EXPLOSION PROOF FOR THE ELECTRICAL AREA OF CLASSIFICATION INSTALLED IN.
K	KEY OPERATED WITH 2 KEYS. ALL SWITCHES KEYED ALIKE, UNLESS NOTED OTHERWISE.
OC	OCCUPANCY SENSOR [WITH MANUAL OVERRIDE].
MC	3 POSITION, MOMENTARY CONTACT WITH CENTER OFF.
WP	WEATHERPROOF.
M	SURFACE MOUNTED MOTOR RATED WITH OVERLOAD ELEMENTS, CONTINOUS CURRENT RATING AND QUANTITY OF POLES AS REQUIRED FOR EQUIPMENT SERVED.
T	DIGITAL TIMER WITH FLASH AND BEEP WARNING, WATTSTOPPER TS-400 OR APPROVED EQUAL. PRESET TO 1 HOUR.
V	VARIABLE SPEED CONTROL SWITCH FOR FAN, FURNISHED WITH EQUIPMENT, UNLESS NOTED OTHERWISE.

WIRING LEGEND

SYMBOLS	DEVICE DESCRIPTION
LP-1,3	BRANCH CIRCUIT "HOMERUN", PANEL AND CIRCUIT NUMBERS INDICATED. NUMBER OF ARROWS DENOTES NUMBER OF CIRCUITS.
	WIRING IN FLEXIBLE METAL CONDUIT, MINIMUM 3/4" UNLESS INDICATED OTHERWISE. REFER TO SPECIFICATIONS FOR TYPE. EXTEND TO EQUIPMENT AND CONNECT PER MANUFACTURER'S INSTRUCTIONS.
	ARC DENOTES WIRING CONCEALED IN WALL, BELOW RAISED FLOOR, OR ABOVE RAISED CEILING, 3/4" CONDUIT MINIMUM WITH #12 AWG CONDUCTORS UNLESS NOTED/SPECIFIED/INDICATED OTHERWISE.
	CHAMFER OR RIGHT ANGLE DENOTES WIRING EXPOSED, 3/4" CONDUIT MINIMUM WITH #12 AWG CONDUCTORS UNLESS NOTED/SPECIFIED/INDICATED OTHERWISE.
	CHAMFER OR RIGHT ANGLE AND DASHED DENOTES WIRING CONCEALED OR BELOW GRADE, 3/4" CONDUIT MINIMUM WITH #12 AWG CONDUCTORS UNLESS NOTED/SPECIFIED/INDICATED OTHERWISE.
30D	IN THIS EXAMPLE, INDICATES SINGLE CONDUCTOR, 3 PHASE, 30 AMPERE DELTA CONFIGURATION; REFER TO FEEDER/BRANCH CIRCUIT SCHEDULE ON DWG _____.
	CONDUIT RUN UP OR TOWARD OBSERVER.
	CONDUIT RUN DOWN OR AWAY FROM OBSERVER.
	CONDUIT CAPPED

LIGHTING LEGEND

SYMBOLS	LIGHTING LUMINAIRE DESCRIPTION
	2'X4' RECESSED, PENDANT, OR SURFACE MOUNTED LUMINAIRE. SEE LUMINAIRE ANCILLARIES BELOW FOR ADDITIONAL REQUIREMENTS.
	2'X2' RECESSED, PENDANT, OR SURFACE MOUNTED LUMINAIRE. SEE LUMINAIRE ANCILLARIES BELOW FOR ADDITIONAL REQUIREMENTS.
	1'X4' RECESSED, PENDANT, OR SURFACE MOUNTED LUMINAIRE. SEE LUMINAIRE ANCILLARIES BELOW FOR ADDITIONAL REQUIREMENTS.
	1'X8' RECESSED, PENDANT, OR SURFACE MOUNTED LUMINAIRE. SEE LUMINAIRE ANCILLARIES BELOW FOR ADDITIONAL REQUIREMENTS.
	ROUND RECESSED, PENDANT, OR SURFACE MOUNTED LUMINAIRE. SEE LUMINAIRE ANCILLARIES BELOW FOR ADDITIONAL REQUIREMENTS.
	SQUARE OR RECTANGLUAR RECESSED, PENDANT, OR SURFACE MOUNTED LUMINAIRE. SEE LUMINAIRE ANCILLARIES BELOW FOR ADDITIONAL REQUIREMENTS.
	WALL MOUNTED EGRESS LIGHT. MOUNT 8'-0" ABOVE FINISHED FLOOR, UNLESS INDICATED OTHERWISE. NUMBERS OF LAMP HEADS AS INDICATED IN LIGHTING FIXTURE SCHEDULE.
	WALL MOUNTED REMOTE LAMP HEAD EMERGENCY LIGHT. MOUNT 8'-0" ABOVE FINISHED FLOOR, UNLESS INDICATED OTHERWISE. NUMBERS OF LAMP HEADS AS INDICATED IN LIGHTING FIXTURE SCHEDULE.
	SINGLE FACED ILLUMINATED EGRESS EXIT SIGN. WHERE USED, DIRECTIONAL ARROWS AS INDICATED. WHERE WALL MOUNTED ABOVE DOOR, MOUNT BOTTOM OF FIXTURE 6" ABOVE DOOR FRAME.
	DUAL FACED ILLUMINATED EGRESS EXIT SIGN. WHERE USED, DIRECTIONAL ARROWS AS INDICATED. WHERE WALL MOUNTED ABOVE DOOR, MOUNT BOTTOM OF FIXTURE 6" ABOVE DOOR FRAME.

SYMBOLS	LUMINAIRE ANCILLARIES
	ONE OR TWO ALPHANUMERIC CHARACTER DENOTING LUMINAIRE TYPE; SEE LIGHTING FIXTURE SCHEDULE.
A 3	LIGHTING PANEL CIRCUIT NUMBER (3 IN THIS EXAMPLE), SEE LIGHTING PANEL SCHEDULE. WHERE DENOTED WITH AN 'R' PREFIX (R3 FOR EXAMPLE); DENOTES RELAY PANEL CIRCUIT NUMBER, SEE RELAY LIGHTING PANEL SCHEDULE.
	WHERE INDICATED, SHADED REGION DENOTES LIFE SAFETY EGRESS.
A, a B	WHERE LOWERCASE ALPHANUMERIC CHARACTER IS INDICATED; DENOTES LUMINAIRE CONTROLLED BY THE CORRESPONDING LIGHT SWITCH.
	WHERE INDICATED, DENOTES LUMINAIRE WIRED TO THE CORRESPONDING PHASE CONDUCTORS.
	DENOTES CONCRETE BASE STANCHION MOUNTED LUMINAIRE. STANCHION HEIGHT AS INDICATED.
	DENOTES HANDRAIL STANCHION MOUNTED LUMINAIRE. STANCHION HEIGHT AS INDICATED.
	DENOTES WALL MOUNTED FIXTURE OR LUMINAIRE. MOUNTING HEIGHT AS INDICATED.
	DENOTES POLE MOUNTED SINGLE ARM LUMINAIRE. POLE HEIGHT AS INDICATED.
	DENOTES POLE MOUNTED TWIN CONFIGURATION SINGLE ARM LUMINAIRE. INDIVIDUAL LUMINAIRE TYPE AS INDICATED; POLE HEIGHT AS INDICATED.
	DENOTES POLE MOUNTED TRIPLEX CONFIGURED SINGLE ARM LUMINAIRE. INDIVIDUAL TYPE AS INDICATED; POLE HEIGHT AS INDICATED.
	DENOTES POLE MOUNTED QUADRAPLEX CONFIGURED SINGLE ARM LUMINAIRE. INDIVIDUAL LUMINAIRE TYPE AS INDICATED; POLE HEIGHT AS INDICATED.

GROUNDING AND LIGHTNING PROTECTION LEGEND

SYMBOLS	DESCRIPTION
	GROUNDING CONDUCTOR, #4/0 AWG BARE COPPER, 30 INCHES BELOW GRADE
	MINIMUM 3/4"Ø X 10 FOOT LONG COPPER-CLAD GROUND ROD, UNLESS NOTED OR SPECIFIED OTHERWISE. SEE DETAIL 9/E-17080-111.
	MINIMUM 3/4"Ø X 10 FOOT LONG COPPER-CLAD GROUND ROD IN TEST WELL, UNLESS NOTED OR SPECIFIED OTHERWISE. SEE DETAIL 5/E-17080-111.
	EXOTHERMIC WELD.
R	FOOTER REBAR TO CABLE CONNECTION.
G	GROUND CONNECTION TO BUILDING STEEL OR EQUIPMENT / VESSEL.
MGB	MAIN GROUND BAR.
BGA	BARREL GROUNDING BAR ASSEMBLY; MOUNTED 5'-0" AFF.
	MAIN LIGHTNING PROTECTION CABLE, ALUMINUM 12 GAUGE, 192 KCMIL.
P	PARAPET TYPE AIR TERMINAL.
F	FLAT ROOF TYPE AIR TERMINAL.
	CROSS RUN CONNECTOR OR "T" CONNECTION. CAST ALUMINUM BOLTED.
	LIGHTNING PROTECTION DOWN CONDUCTOR.

DESIGNATION	DEVICE DESIGNATION
3	WHERE USED, DENOTES QUANTITY OF ETHERNET CABLES. (3 IN THIS EXAMPLE)
A	DENOTES OUTLET FOR WHICH LOCATION AND MOUNTING ARRANGEMENT IS SHOWN ON ARCHITECTURAL DRAWINGS.
WP	WEATHERPROOF WITH HINGED COVER.
H50	DENOTES MOUNTING HEIGHT IN INCHES ABOVE FINISHED FLOOR TO CENTER; 50" AFF IN THIS EXAMPLE.
C6	DENOTES MOUNTING HEIGHT IN INCHES ABOVE COUNTER TO CENTER; 6" AFF IN THIS EXAMPLE. SEE ARCHITECTURAL PLANS FOR COUNTER TOP LOCATION.
CW	DENOTES OUTLET LOCATED WITHIN CASEWORK. COORDINATE LOCATION WITH ARCHITECTURAL CASEWORK DETAILS AND VERIFY LOCATION WITH OWNER'S REPRESENTATIVE.
V	VERIFY EXACT LOCATION AND HEIGHT WITH OWNER'S REPRESENTATIVE PRIOR TO INSTALLATION.
*	COORDINATE MOUNTING HEIGHT AND EXACT LOCATION WITH EQUIPMENT SERVED BY OUTLET, AND ALL OTHER WORK IN VICINITY OF OUTLET.
TV	TELEVISION OUTLET TYPE; COORDINATE MOUNTING HEIGHT AND EXACT LOCATION WITH OWNER'S REPRESENTATIVE PRIOR TO INSTALLATION.
P	CEILING MOUNTED PROJECTOR AUDIO/VISUAL COMMUNICATION OUTLETS. SIZE JUNCTION BOX ACCORDINGLY.

PRELIMINARY DRAWING
FOR REVIEW ONLY - NOT FOR CONSTRUCTION

INCHES 1 2
CENTIMETERS 1 2 3 4 5 6

NATIONAL SCIENCE FOUNDATION
OFFICE OF POLAR PROGRAMS
WASHINGTON, D.C. NSF
CONTRACT OPP. 0000373

REVISION LOG

REV.	DATE	DESCRIPTION	DFTG.	APPD.
A	09/23/2016	30% DESIGN SUBMITTAL	JDS	RDP

MCMURDO STATION
BL010 - IT PRIMARY OPERATIONS FACILITY
ELECTRICAL

7400 South Tucson Way
Centennial, Colorado
80112 - 3938 USA
303 - 790 - 8606
800 - 688 - 8606
ASC ANTARCTIC SUPPORT CONTRACT

PROJECT NUMBER: 160604MCM010
FILE NAME: 160604MCM010E-002-RA
DESIGNED BY: BGJ
DRAWN BY: JDS
DATE CHECKED: 09/23/2016
SHEET TITLE: LEGEND
SHEET NUMBER: E-002

SINGLE LINE DIAGRAM LEGEND

SYMBOLS	DESCRIPTION
250 AF / 225 AT LSIG	LOW VOLTAGE BOLT-ON OR PLUG-ON STATIONARY (FIXED) MOLDED CASE CIRCUIT BREAKER. IN THIS EXAMPLE: '250 AF' DENOTES 250 AMP FRAME SIZE SET TO TRIP AT 225 AMPS. WHERE INDICATED, 'LSIG' DENOTES ADJUSTABLE PROTECTION TYPE, SEE ADJUSTABLE PROTECTION DESIGNATIONS THIS SHEET FOR DESCRIPTION.
250 AF / 225 AT LSIG	LOW VOLTAGE PLUG-ON TYPE STATIONARY (FIXED) MOLDED CASE CIRCUIT BREAKER. IN THIS EXAMPLE: '250 AF' DENOTES 250 AMP FRAME SIZE SET TO TRIP AT 225 AMPS. WHERE INDICATED, 'LSIG' DENOTES ADJUSTABLE PROTECTION TYPE, SEE ADJUSTABLE PROTECTION DESIGNATIONS THIS SHEET FOR DESCRIPTION.
50 CAR / 300 IPS MCP	LOW VOLTAGE PLUG-ON TYPE STATIONARY (FIXED) MOLDED CASE MOTOR CIRCUIT PROTECTOR. IN THIS EXAMPLE: '50 CAR' DENOTES 50 CONTINUOUS AMPERE RATING (CAR) WITH INSTANTANEOUS PICK-UP (IPS) SET APPROXIMATELY AT 300 AMPERES.
1200/5 3 LSIG	SOLID STATE TRIP UNIT WITH CT INPUT OR MODULE CAPABLE OF MONITORING AMPS, INSTANTANEOUS KW, PEAK KW AND KWH. IN THIS EXAMPLE, 'LSIG' DENOTES ADJUSTABLE PROTECTION TYPE, SEE ADJUSTABLE PROTECTION DESIGNATIONS THIS SHEET FOR DESCRIPTION, 1200/5 DENOTES CURRENT TRANSFORMER RATIO AND '3' DENOTES CURRENT TRANSFORMER QUANTITY.
MR 3 1200/5	PHASE CURRENT TRANSFORMER, RATING AND QUANTITY AS INDICATED. IN THIS EXAMPLE, '1200/5' DENOTES 1200/5 AMP CT RATIO, '3' DENOTES QUANTITY, 'MR' DENOTES MULTI-RATIO TYPE
50/5 1	ZERO SEQUENCE CURRENT TRANSFORMER, RATING AND QUANTITY AS INDICATED. IN THIS EXAMPLE, '50/5' DENOTES 50/5 AMP CT RATIO, '1' DENOTES QUANTITY.
100 VA PT	POTENTIAL TRANSFORMER, RATING AS INDICATED. IN THIS EXAMPLE, '100 VA' DENOTES 100 VOLT-AMPS POTENTIAL TRANSFORMER RATING.
480V 10KVA 1PH CPT 120/240V	CONTROL POWER TRANSFORMER WITH PRIMARY VOLTAGE, SECONDARY VOLTAGE, KVA AND PHASE INDICATED.
T-PD2A XC30Y 30KVA 480 V- 208/120 V	LOW VOLTAGE GENERAL PURPOSE DRY-TYPE TRANSFORMER. IN THIS EXAMPLE, 'T-PD2A', DENOTES THE UNIQUE TRANSFORMER DESIGNATION. 'XC30Y' DENOTES THE TRANSFORMER TYPE, SEE TRANSFORMER SCHEDULE FOR ADDITIONAL REQUIREMENTS. '30KVA' DENOTES THE TRANSFORMER RATING, '480V - 208/120V' DENOTES THE TRANSFORMER PRIMARY AND SECONDARY VOLTAGES.
T-PD2A AA/FA 1500/2000 KVA 13200 V- 480/277 V	CAST COIL POWER DRY-TYPE TRANSFORMER. IN THIS EXAMPLE, 'T-PD2A', DENOTES THE UNIQUE TRANSFORMER DESIGNATION. 'AA/FA' DENOTES AMBIENT AIR (AA) / FORCED AIR (FA); '1500/2000' KVA DENOTES THE TRANSFORMER AA/FA RATING, '13200V - 480/277V' DENOTES THE TRANSFORMER PRIMARY AND SECONDARY VOLTAGES.
2	MEDIUM VOLTAGE CABLE LUG TERMINATION. WHERE INDICATED, NUMERIC VALUE INDICATES QUANTITY PER PHASE.
2	MEDIUM VOLTAGE CABLE PLUG TERMINATION. WHERE INDICATED, NUMERIC NUMBERS INDICATE QUANTITY PER PHASE.
S1A	ELECTRICAL CONNECTION. WHERE ALPHA-NUMERIC CHARACTER(S) ARE INDICATED ADJACENT TO THE ELECTRICAL CONNECTION; ALPHA-NUMERIC CHARACTER(S) DENOTE THE LOCATION OF THE EQUIPMENT LOCATED WITHIN ELECTRICAL EQUIPMENT. IN THIS EXAMPLE, 'S1A' DENOTES SECTION 1 ELEVATION A.
P S L ATS	TRANSFER SWITCH. 'ATS' DENOTES AUTOMATIC TRANSFER TYPE, 'MTS' DENOTES MANUAL TRANSFER TYPE. 'P' DENOTES PRIMARY POWER SOURCE; 'S' DENOTES SECONDARY POWER SOURCE; 'L' DENOTES TRANSFER SWITCH LOAD SIDE CONNECTION POINT.
MCB PNL L1A	PANELBOARD WITH MAIN CIRCUIT BREAKER. DESIGNATION AS INDICATED (L1A, IN THIS EXAMPLE).
PNL L1A	PANELBOARD WITH MAIN LUGS ONLY. DESIGNATION AS INDICATED (L1A, IN THIS EXAMPLE).

SINGLE LINE DIAGRAM LEGEND

SYMBOLS	DESCRIPTION
SPD 2C	SURGE PROTECTIVE DEVICE, ALPHANUMERIC DESIGNATION REPRESENTS SPD UL TYPE AND THE CATEGORY PROTECTION TYPE; SEE SURGE PROTECTIVE DEVICE SCHEDULE.
SH	THERMOSTAT CONTROLLED SPACE HEATER FURNISHED BY EQUIPMENT MANUFACTURER; WIRED BY ELECTRICAL CONTRACTOR.
MM	PROVIDE AUXILIARY CONTACTS FOR MONITORING THE ABSENCE OF POWER AT DISCONNECT AND HANDLE "OFF" POSITION. THE MONITOR MODULE SHALL BE FURNISHED AND WIRED BY THE F.A. CONTRACTOR TO THE FIRE ALARM SYSTEM; E.C. SHALL WIRE FROM CONTACTS TO MONITOR MODULE.
N.C. 600 A	LOAD INTERRUPTER SWITCH, AMPERE RATINGS AS INDICATED. WHERE ADDITIONAL ALPHANUMERIC OR NUMERIC DESIGNATIONS ARE INDICATED, REFER TO DISCONNECT CHARACTERISTICS.
30A/3P N.C.	NON-FUSED DISCONNECT / SAFETY SWITCH. UNLESS INDICATED OTHERWISE, DISCONNECT SWITCH IS: 30A, 3P WITH GROUND BAR, NEMA 1 ENCLOSURE, VOLTAGE RATING NO LESS THAN APPLIED CIRCUIT VOLTAGE (240VAC OR 600VAC).
30A/3P N.O.	NON-FUSED DISCONNECT SWITCHES SHALL HAVE A MINIMUM 10,000 AIC NON-SERIES RATING. LOCATION AND SUPPORT OF DISCONNECT SWITCH SHALL BE COORDINATED WITH RELATED EQUIPMENT AND SHALL COMPLY WITH NEC AND EQUIPMENT MFR'S INSTRUCTIONS. SWITCH SHALL BE LOCKABLE IN OPEN POSITION.
30A/3P N.C. F-30A	FUSED DISCONNECT / SAFETY SWITCH. UNLESS INDICATED OTHERWISE, DISCONNECT SWITCH IS: 30A, 3P WITH GROUND BAR, NEMA 1 ENCLOSURE, VOLTAGE RATING NO LESS THAN APPLIED CIRCUIT VOLTAGE (240VAC OR 600VAC), FUSED AT 30A.
	DISCONNECT SWITCHES SHALL HAVE 200,000 AIC RATING WHEN PROTECTED BY UL CLASS L, J, OR RK1 FUSES DESCRIBED UNDER THE FUSE DESCRIPTION. LOCATION AND SUPPORT OF DISCONNECT SWITCH SHALL BE COORDINATED WITH RELATED EQUIPMENT AND SHALL COMPLY WITH NEC AND EQUIPMENT MFR'S INSTRUCTIONS. SWITCH SHALL BE LOCKABLE IN OPEN POSITION.

DESIGNATION	DISCONNECT CHARACTERISTICS
60A/3 P	IN THIS EXAMPLE. DENOTES 60 AMPERES / 3 POLE.
F-30A	IN THIS EXAMPLE, DENOTES FUSED WITH 30 AMPERE FUSES.
F-MFR	DENOTES FUSE RATING IN ACCORDANCE WITH MANUFACTURER'S INSTRUCTIONS FOR THE UTILIZATION EQUIPMENT PROTECTED BY THE FUSES.
N3R	IN THIS EXAMPLE, DENOTES NEMA 3R ENCLOSURE.
SN	DENOTES SOLID NEUTRAL.
N.C.	DENOTES NORMALLY CLOSED.
N.O.	DENOTES NORMALLY OPEN.

SYMBOLS	DESCRIPTION
F-200 A	FUSE, RATING AS INDICATED. IN THIS EXAMPLE, 'F-200 A' DENOTES 200 AMP FUSE. UNLESS INDICATED OTHERWISE, FUSES SHALL BE PROVIDED IN EACH PHASE, CURRENT LIMITING DUAL-ELEMENT TIME DELAY, 200,000 AIC RATING, UL CLASS L, J OR RK1. COORDINATE FUSE RATINGS AND TYPES WITH MFR'S INSTRUCTIONS FOR EQUIPMENT PROTECTED BY FUSES.
E 1 FVNR	MOTOR CONTROL CENTER MOTOR STARTER OR LOCAL CONTROLLER. IN THIS EXAMPLE, '1' DENOTES NEMA SIZE, 'FVNR' DENOTES FULL VOLTAGE NON-REVERSING, WHERE INDICATED, 'E' DENOTES ELECTRONIC OR SOLID STATE OVERLOAD RELAY. UNLESS INDICATED OTHERWISE, LOCAL CONTROLLER ENCLOSURES ARE RATED NEMA 1.

SINGLE LINE DIAGRAM LEGEND

SYMBOLS	DESCRIPTION
E 1 FVR	MOTOR CONTROL CENTER MOTOR STARTER OR LOCAL CONTROLLER. IN THIS EXAMPLE, '1' DENOTES NEMA SIZE, 'FVR' DENOTES FULL VOLTAGE REVERSING, WHERE INDICATED, 'E' DENOTES ELECTRONIC OR SOLID STATE OVERLOAD RELAY. UNLESS INDICATED OTHERWISE, LOCAL CONTROLLER ENCLOSURES ARE RATED NEMA 1.
VFD	MOTOR CONTROL CENTER MOTOR STARTER OR LOCAL CONTROLLER. IN THIS EXAMPLE, 'VFD' DENOTES VARIABLE OR ADJUSTABLE FREQUENCY DRIVE. UNLESS INDICATED OTHERWISE, LOCAL CONTROLLER ENCLOSURES ARE RATED NEMA 1.
50 EF-01	MOTOR EQUIPMENT IDENTIFICATION AND HORSEPOWER AS INDICATED.
50 KVA EF-01	PACKAGED EQUIPMENT IDENTIFICATION AND KILOVOLT-AMPERE AS INDICATED. PACKAGED EQUIPMENT IS FURNISHED WITH LOCAL DISCONNECT AND IS A SINGLE POINT CONNECTION UNLESS NOTED OTHERWISE.
	ELECTRONIC METERING MODULE: MICROPROCESSOR BASED FOR METERING, ANALYZING, WAVEFORM CAPTURE AND CAPABLE OF PROVIDING MONITORED DATA PARAMETERS
	LOCAL MONITORING UNIT FOR SWITCHGEAR ASSEMBLIES CAPABLE OF UP TO 40 SEPARATE DATA INPUTS FROM BREAKER LSIG'S, EMM'S AND MFR'S; CONFIGURABLE DISPLAY SCREEN; DATA OUTPUT PORTS
OR	DENOTES BRANCH CIRCUIT / FEEDER CONDUIT TO CABLE TRAY TRANSITION OR FROM CABLE TRAY TO CONDUIT TRANSITION. WHERE CONDUCTORS ARE INSTALLED IN PARALLEL IN MULTIPLE CONDUITS, THE EQUIPMENT GROUNDING CONDUCTORS SHALL BE INSTALLED IN EACH CONDUIT AND SHALL BE TAPPED FROM THE COMMON EQUIPMENT GROUND (CEG) CONDUCTOR ROUTED WITHIN THE CABLE TRAY.
	DENOTES FUTURE CIRCUIT / EQUIPMENT
	DENOTES BRANCH CIRCUIT / FEEDER IN CABLE TRAY.
	DENOTES BRANCH CIRCUIT / FEEDER IN CONDUIT.
	DENOTES GROUNDING SYSTEM.
	DENOTES ELECTRICAL EQUIPMENT BUS.
	DENOTES DATA CIRCUITRY
	DENOTES EQUIPMENT ENCLOSURE.

BRANCH CIRCUIT / FEEDER LEGEND

WIRE TYPE	DESCRIPTION
3#12,#12G,3/4"C	THIS EXAMPLE INDICATES THREE SINGLE PHASE CONDUCTORS SIZE 12 AWG AND A SINGLE GROUND CONDUCTOR SIZE #12 AWG IN 3/4" CONDUIT.
2#12,#12G,MC	THIS EXAMPLE INDICATES TWO SINGLE PHASE CONDUCTORS SIZE #12 AWG AND A SINGLE GROUND CONDUCTOR SIZE #12 AWG WRAPPED IN METAL-CLAD ARMOR (MC CABLE).
3/C#12 W/#12G, 3/4"C	THIS EXAMPLE INDICATES THREE SINGLE PHASE CONDUCTORS SIZE #12 AWG AND A SINGLE GROUND CONDUCTOR SIZE #12 AWG WITHIN A SINGLE OUTER JACKET IN 3/4" CONDUIT.
2[3/C#1/0,#2G, 2"C]	THIS EXAMPLE INDICATES TWO PARALLEL SETS OF THREE SINGLE PHASE CONDUCTORS SIZE #1/0 AWG WITHIN A SINGLE OUTER JACKET ALONG WITH A SINGLE SEPARATE SIZE #2 AWG GROUND CONDUCTOR IN 2" CONDUIT.
4#12,#12G,3/4"C	THIS EXAMPLE INDICATES THREE SINGLE PHASE CONDUCTORS SIZE #12 AWG, ONE NEUTRAL CONDUCTOR SIZE #12 AWG, AND ONE GROUND CONDUCTOR SIZE #12 AWG IN 3/4" CONDUIT.

BRANCH CIRCUIT / FEEDER LEGEND

WIRE TYPE	DESCRIPTION
2[3/C #1/0 W/#2G, CT]	THIS EXAMPLE INDICATES TWO PARALLEL SETS OF THREE SINGLE PHASE CONDUCTORS SIZE #1/0 AWG AND A SINGLE GROUND CONDUCTOR SIZE #2 AWG WITHIN A SINGLE TC-ER RATED OUTER JACKET ROUTED ALONG THE ASSOCIATED CABLE TRAY.
2[3/C#1/0],# 4/0CEG,CT	THIS EXAMPLE, INDICATES TWO PARALLEL SETS OF THREE SINGLE PHASE CONDUCTORS SIZE #1/0 AWG WITHOUT GROUND CONDUCTOR WITHIN A SINGLE TYPE TC RATED OUTER JACKET, ROUTED IN CABLE TRAY. #4/0 CEG DENOTES A SINGLE COMMON EQUIPMENT GROUND (CEG) CONDUCTOR SIZE ROUTED ALONG THE ASSOCIATED CABLE TRAY. REFER TO TYPICAL CEG ALONG CABLE TRAY DETAIL.
2[3/C #1/0 W/#2G, 2"C]	THIS EXAMPLE INDICATES TWO PARALLEL SETS OF THREE SINGLE PHASE CONDUCTORS SIZE #1/0 AWG AND A SINGLE GROUND CONDUCTOR SIZE #2 AWG WITHIN A SINGLE TC-ER RATED OUTER JACKET IN 2" CONDUIT.
3/C#500 W/#2G, CT	THIS EXAMPLE, INDICATES A SET OF THREE SINGLE PHASE CONDUCTORS SIZE 500KCMIL WITH #2 AWG GROUND CONDUCTOR WITHIN A SINGLE OUTER JACKET, ROUTED IN CABLE TRAY.
3/C #4/0 W/3-1/C # 6G, CT OR CONDUIT	THIS EXAMPLE INDICATES THREE SINGLE PHASE CONDUCTORS SIZE #4/0 AWG AND THREE SINGLE GROUND CONDUCTORS SIZE #6G, SHIELDED, WITHIN A SINGLE TYPE TC-ER RATED OUTER JACKET. WHERE DENOTED BY 'CT' CABLE SHALL BE ROUTED IN CABLE TRAY, WHERE DENOTED BY 'C' CABLE SHALL BE ROUTED IN CONDUIT. CONDUIT SIZE AS NOTED.
3/C #4/0 (15KV SHLD.) W/ #3G, 4"C	THIS EXAMPLE INDICATES THREE SINGLE PHASE CONDUCTORS, SIZE #4/0 AWG AND ONE SINGLE GROUND CONDUCTOR, SIZE #3 AWG, 15KV SHIELDED, WITHIN A SINGLE OUTER JACKET, IN 4" CONDUIT.
2[3/C 500 (15KV SHLD.)], #4/0CEG, CT	THIS EXAMPLE INDICATES TWO PARALLEL SETS OF THREE SINGLE PHASE CONDUCTORS, SIZE 500 KCMIL, WITHOUT GROUND CONDUCTOR, SHIELDED, WITHIN A SINGLE TYPE TC RATED OUTER JACKET ROUTED IN CABLE TRAY. '#4/0 CEG' DENOTES A SINGLE COMMON EQUIPMENT GROUND (CEG) CONDUCTOR SIZE ROUTED ALONG THE ASSOCIATED CABLE TRAY. REFER TO TYPICAL CEG ALONG CABLE TRAY DETAIL.
225D	FEEDER / BRANCH CIRCUIT DESIGNATION. IN THIS EXAMPLE, '225D' REFERS TO THE SYMBOL COLUMN OF THE FEEDER/BRANCH CIRCUIT SCHEDULE. THE ASSOCIATED SYMBOL DESIGNATION DENOTES THE FEEDER / BRANCH CIRCUIT REQUIREMENTS FOR THE ITEM TAGGED.

ADJUSTABLE PROTECTION DESIGNATIONS

SYMBOLS	DESCRIPTION
DESIGNATION	PROTECTION
L	LONG PICKUP AND TIME DELAY PROTECTION
S	SHORT PICKUP AND TIME DELAY PROTECTION
I	INSTANTANEOUS PICKUP PROTECTION
G	GROUND (EARTH) PICKUP AND TIME DELAY PROTECTION
N	NEUTRAL PROTECTION
DESIGNATION	PROTECTION DEVICE FEATURES / ACCESSORIES
	NOTE: MULTIPLE DESIGNATIONS MAY BE ADJACENT TO DEVICE.
K	KEY INTERLOCK
ST	SHUNT TRIP
ET	ELECTRONIC TRIP

PRELIMINARY DRAWING
FOR REVIEW ONLY - NOT FOR CONSTRUCTION

INCHES 1 2
CENTIMETERS 1 2 3 4 5 6

NATIONAL SCIENCE FOUNDATION
OFFICE OF POLAR PROGRAMS
WASHINGTON, D.C. NSF
CONTRACT OPP. 0000373

REVISION LOG

REV.	DATE	DESCRIPTION	DFTG.	APPD.
A	09/23/2016	30% DESIGN SUBMITTAL	JDS	RDP

MCMURDO STATION
BL010 - IT PRIMARY OPERATIONS FACILITY
ELECTRICAL

7400 South Tucson Way
Centennial, Colorado
80112 - 3938 USA
303 - 790 - 8606
800 - 688 - 8606
ASC ANTARCTIC SUPPORT CONTRACT

PROJECT NUMBER: 160604MCM010
FILE NAME: 160604MCM010E-003-RA
DESIGNED BY: BGJ
DRAWN BY: JDS
DATE CHECKED: 09/23/2016
SHEET TITLE: LEGEND
SHEET NUMBER: E-003

1 2 3 4 5 6 7 8
D C B A

E - KEY - ABBREVIATIONS

A, AMP	AMMETER, AMPERE
AA	AMBIENT AIR
ABBREV	ABBREVIATION
ABV	ABOVE
AC	ALTERNATING CURRENT
ACT	ABOVE COUNTER TOP
AF	AMP FRAME, CIRCUIT BREAKER FRAME AND TRIP DEVICE SENSOR SIZE (AMPS)
AFF	ABOVE FINISHED FLOOR
AFG	ABOVE FINISHED GRADE
AHU	AIR HANDLING UNIT
AIC	AMPERE INTERRUPTING CAPACITY
AL	ALUMINUM
AM	AMPERE METER
ANN	ANNUNCIATOR
ANSI	AMERICAN NATIONAL STANDARDS INSTITUTE
AS	AMMETER SWITCH
ASYM	ASYMMETRICAL
AT	AMP TRIP, TRIP DEVICE RATING PLUG SIZE (AMPS)
ATC	AIR TERMINAL CHAMBER
ATS	AUTOMATIC TRANSFER SWITCH, TRIP DEVICE LONG TIME PICKUP SETTING (AMPS)
ATX	AUTO TRANSFORMER
AVG	AVERAGE
AWG	AMERICAN WIRE GAUGE
BAS	BUILDING AUTOMATION SYSTEM
BATT	BATTERY, BATTERIES
BC	BARE COPPER
BIAX	BIAXIAL
BIL	BASIC IMPULSE LEVEL
BKR	BREAKER
BLDG	BUILDING
B.O.C.	BOTTOM OF CONDUIT
B.O.D.	BOTTOM OF DUCT
B.O.P.	BOTTOM OF PIPE
B.O.T.	BOTTOM OF TRAY
*C	CELSIUS
C	CONDUIT, COIL
CAT. NO, CAT	CATALOG
CBM	CERTIFIED BALLAST MANUFACTURER
CCTV	CLOSED CIRCUIT TELEVISION CAMERA
CEG	COMMON EQUIPMENT GROUND
CFM	CUBIC FEET PER MINUTE
CKT	CIRCUIT
CLF	CURRENT LIMITING FUSE
CLO	CLOSET
cm	CENTIMETER
CMS	COMBINATION MOTOR STARTER
CND	CONDUIT
COMPT	COMPARTMENT
CONT	CONTINUOUS, CONTINUED
CPT	CONTROL POWER TRANSFORMER
CPU	CENTRAL PROCESSING UNIT
CRAC	COMPUTER ROOM AIR CONDITIONING UNIT
CRI	COLOR RENDERING INDEX
CS	CONTROL SWITCH
CSA	CANADIAN STANDARDS ASSOCIATION
CSCCN	CENTRAL SCIENTIFIC COMMUNICATIONS NETWORK
CT	CURRENT TRANSFORMER, CABLE TRAY
CU	COPPER, COEFFICIENT OF UTILIZATION
CY	CYCLE(S)
Δ	DELTA
D	DEPTH, DEEP
DB	DUCT BANK
DC	DIRECT CURRENT
DEPT	DEPARTMENT
DESIG	DESIGNATION
DIA	DIAMETER
DISC	DISCONNECT
DIST, DISTRIB	DISTRIBUTION
DIV	DIVISION
DS, DSW	DISCONNECT SWITCH
DWG(S)	DRAWING(S)
(E), EX	EXISTING
E	EMPTY

E - KEY - ABBREVIATIONS

EC	EMPTY CONDUIT
EF	EACH FACE
EGC	EQUIPMENT GROUNDING CONDUCTOR
EL. ELEV	ELEVATION
ELEC	ELECTRICAL/ELECTRIC
EM, EMER	EMERGENCY
EMER	EMERGENCY
EMH	EXISTING MANHOLE, ELECTRICAL MANHOLE
EMO	EMERGENCY MANUAL OFF
EMS	ENERGY MANAGEMENT SYSTEM
EMT	ELECTRICAL METALLIC TUBING
ENT	ELECTRICAL NON-METALLIC TUBING
EO	ELECTRICALLY OPERATED
EOL	END-OF-LINE DEVICE
EPP	EXISTING POWER POLE
EPR	ETHYLENE-PROPYLENE RUBBER
EQPT	EQUIPMENT
E.T.	ELECTRONIC TRIP
ETC	ETCETERA
ETL	ELECTRICAL TESTING LABORATORIES
ES	ENERGY SAVING
EW	EACH WAY
EWC	ELECTRIC WATER COOLER
EWH	ELECTRIC WATER HEATER
EX, EXST	EXISTING, EXHAUST
(F)	FUTURE
F	FAHRENHEIT
FA	FORCED AIR, FIRE ALARM
FACP	FIRE ALARM CONTROL PANEL
FBO	FURNISHED BY OTHERS, FURNISHED BY OWNER
FC	FLEXIBLE CONDUIT
FDR	FEEDER
FFE	FINISHED FLOOR ELEVATION
FIXT	FIXTURE
FL	FOOT LAMBERTS
FLR	FLOOR
FLUOR	FLUORESCENT
FREQ	FREQUENCY
FRP	FIBERGLASS-REINFORCED POLYESTER
FT	FOOT
FU	FUSE
FUT	FUTURE
FVNR	FULL VOLTAGE NON-REVERSING
FVR	FULL VOLTAGE REVERSING
FWE	FURNISHED WITH EQUIPMENT, INDICATES ITEM IS FURNISHED WITH EQUIPMENT SUPPLIED UNDER OTHER DIVISIONS, BUT INSTALLED UNDER DIVISION 26.
g	GRAM
G, GND	GROUND
GA	GAUGE
GALV	GALVANIZED
GEC	GROUNDING ELECTRODE CONDUCTOR
GEN	GENERATOR
GFCI	GROUND FAULT EQUIPMENT PROTECTIVE DEVICE
GFE	DENOTES GOVERNMENT FURNISHED EQUIPMENT, CONTRACTOR INSTALLED
GFEPD	GROUND FAULT EQUIPMENT PROTECTIVE DEVICE
GFP	GROUND FAULT PROTECTION
GFR	GROUND FAULT RELAY
GP	GENERAL PURPOSE
H	HEIGHT, HORN
HALOG	HALOGEN
HE	HIGH EXPOSURE
HH	HANDHOLE
HID	HIGH INTENSITY DISCHARGE
HORIZ	HORIZONTAL
HP	HORSEPOWER
HPF	HIGH POWER FACTOR
HPS	HIGH PRESSURE SODIUM
HRG	HIGH RESISTANCE GROUND
HVAC	HEATING, VENTILATING AND AIR CONDITIONING
HZ	HERTZ
IAW	IN ACCORDANCE WITH
ICEA	INSULATED CABLE ENGINEERS ASSOCIATION
IDS	INTRUSION DETECTION SYSTEM

E - KEY - ABBREVIATIONS

IEC	INTERNATIONAL ELECTROTECHNICAL COMMISSION
IEEE	INSTITUTE OF ELECTRICAL AND ELECTRONICS ENGINEERS
IESCR	INTEGRATED EQUIPMENT SHORT CIRCUIT RATING
IESNA, IES	ILLUMINATING ENGINEERING SOCIETY OF NORTH AMERICA
IG	ISOLATED GROUND
IMC	INTERMEDIATE METAL CONDUIT
INC, INCAND	INCANDESCENT
INST	INSTRUCTIONS, INSTRUMENT/INSTRUMENTATION
INTER	INTERMEDIATE
J, JB	JUNCTION BOX
*K	DEGREES KELVIN
K	KEY INTERLOCK
KA	KILO-AMPERES
KCM, KCMIL	1000 CIRCULAR MILS
KG	KILO-GRAM
KM	KILO-METER
KV	KILO-VOLTS
KVA	KILO-VOLT AMPERES
KVAC	KILO-VOLT AMPERES CONNECTED
KVAD	KILO-VOLT AMPERES DEMAND
KVAR	KILO-VOLT AMPERES REACTIVE
KW	KILOWATT
KWD	KILOWATT DEMAND
L	LUMEN, LENGTH
LA	LIGHTNING ARRESTER
LAN	LOCAL AREA NETWORK
LB(S)	POUND(S)
LED('S)	LIGHT EMITTING DIODE(S)
LPF	LOW POWER FACTOR
LRG	LOW RESISTANCE GROUND
LSGM	LONG-TIME/SHORT-TIME TRIP
LSI	LONG-TIME/SHORT-TIME/INSTANTANEOUS TRIP
LSIG	LONG-TIME/SHORT-TIME/INSTANTANEOUS/GROUND FAULT TRIP
LSIGM	LONG-TIME/SHORT-TIME/INSTANTANEOUS/GROUND FAULT TRIP AND METERING
LSIM	LONG-TIME/SHORT-TIME/INSTANTANEOUS TRIP AND METERING
LT	LIQUID TIGHT
LTG	LIGHTING
LTS	LIGHTS
LV	LOW VOLTAGE
LVR	LOW VOLTAGE RELAY
m	METER
mm	MILLIMETER
MAX	MAXIMUM
MC	METAL-CLAD CABLE
MCB	MAIN CIRCUIT BREAKER
MCC	MOTOR CONTROL CENTER
MCCB	MOLDED CASE CIRCUIT BREAKER
MECH	MECHANICAL
MEZZ	MEZZANINE
MFR	MANUFACTURER
M/G	MOTOR/GENERATOR
MH	MOUNTING HEIGHT, MAN HOLE
MHL	METAL HALIDE LAMP
MI	MINERAL INSULATED
MIN	MINIMUM
MIP	MEDICAL ISOLATION PANEL
MLO	MAIN LUGS ONLY
MO	MECHANICALLY OPERATED, MOTOR OPERATOR
MP	MOTOR PROTECTOR
MS	MASTER SUBSTATION, MOTOR STARTER
MSP	MOTOR STARTER PANEL
MT	MOUNT
MTD	MOUNTED
MTG	MOUNTING
MTTOE	MOUNTED TO TOP OF EQUIPMENT
MV	MEDIUM VOLTAGE
(N)	NEW
N, NEUT	NEUTRAL
N/A	NOT APPLICABLE

E - KEY - ABBREVIATIONS

N.C.	NORMALLY CLOSED
NEC	NATIONAL ELECTRICAL CODE
NEMA	NATIONAL ELECTRICAL MANUFACTURERS ASSOCIATION
NFPA	NATIONAL FIRE PROTECTION ASSOCIATION
NIC	NOT IN CONTRACT
N.O.	NORMALLY OPEN
NO.	NUMBER
NOS	NUMBERS
N.O.L.	NON-OVERLOAD
NPF	NORMAL POWER FACTOR
NPT	NATIONAL PIPE THREAD
NTE	NOT TO EXCEED
NTS	NOT TO SCALE
O.C.	ON CENTER
OFCI	OWNER FURNISHED, CONTRACTOR INSTALLED
OFE	OWNER FURNISHED EQUIPMENT, CONTRACTOR INSTALLED
OFOI	OWNER FURNISHED, OWNER INSTALLED
O.L.	OVERLOAD
OPT	OPTIONAL
P	POLE, POWER
PB	PRIVATE BRANCH EXCHANGE
PBRD	PANELBOARD
PCC	POINT OF COMMON COUPLING
PDP	POWER DISTRIBUTION PANEL
PDU	POWER DISTRIBUTION UNIT
PF	POWER FACTOR
PH	PHASE
PLC	PROGRAMMABLE LOGIC CONTROLLER
PMCS	POWER MONITORING AND CONTROL SYSTEM
PNL	PANEL
PT	POTENTIAL TRANSFORMER
PVC	POLYVINYL CHLORIDE
QTY	QUANITY
(R)	RELOCATE
%R	PERCENT RESISTANCE
R	RESISTANCE, RATE, RISE
R/I	RECTIFIER/INVERTER
RCR	ROOM CAVITY RATIO
RCPT	RECEPTACLE
RECP(S)	RECEPTACLE(S)
REQD	REQUIRED
REQMTS	REQUIREMENTS
RFI	RADIO FREQUENCY INTERFERENCE
RGS	RIGID GALVANIZED STEEL
RM	ROOM
RMS	ROOT MEAN SQUARE
RQD	REQUIRED
RVAT	REDUCED VOLTAGE AUTOTRANSFORMER
RVNR	REDUCED VOLTAGE NON-REVERSING
RVR	REDUCED VOLTAGE REVERSING
S/MH	SPACING TO MOUNTING HEIGHT RATIO
S.C.	SHORT CIRCUIT
SCHED	SCHEDULE
SE	SERVICE ENTRANCE
SEC	SECONDS
SECT	SECTION
SES	SERVICE ENTRANCE SUBSATATION
SHLD	SHIELDED, SHIELD
SKVA	STARTING KILO-VOLT AMPERES
SM	SOLID NEUTRAL
SN	SHARED NEUTRAL
SP	SPARE
SPD	SURGE PROTECTIVE DEVICE
SQ	SQUARE
SS	STAINLESS STEEL
SSBJ	SUPPLY-SIDE BONDING JUMPER
SSL	SOLID STATE LIGHT
SSM	SOLID STATE METERING
SST	SOLID STATE TRIP
ST	SHUNT TRIP
STA	STATION
STD	STANDARD
STP	SHIELDED TWISTED PAIR
SW	SWITCH
SWBD	SWITCHBOARD

E - KEY - ABBREVIATIONS

SWGR	SWITCHGEAR
SYM	SYMMETRICAL
SYNC	SYNCHRONIZER
T, TX	TRANSFORMER
T&B	TOP AND BOTTOM
TB	TERMINAL BLOCK
TBD	TO BE DETERMINED
TDR	TIME DELAY RELAY
TEL	TELEPHONE
TEL CAB	TELEPHONE CABINET
TJB	TERMINAL JUNCTION BOX
T.O.C.	TOP OF CONDUIT
TSTAT	THERMOSTAT
TYP, (TYP)	TYPICAL
UG, UGND	UNDERGROUND
UH	UNIT HEATER
UL	UNDERWRITERS' LABORATORIES
UNO, UON	UNLESS NOTED OTHERWISE, UNLESS OTHERISE NOTED
UPS	UNINTERRUPTIBLE POWER SUPPLY
UTP	UNSHIELDED TWISTED PAIR
V	VOLT, VOLTS, VOLTMETER
VA	VOLT-AMPERE
VAC	VOLTS ALTERNATING CURRENT
VAR	VOLT AMPERE REACTIVE
VDC	VOLTS DIRECT CURRENT
VESDA	VERY EARLY SMOKE DETECTION
VERT	VERTICAL
VFD	VARIABLE FREQUENCY DRIVE
VM	VOLT METER
VPE	VACUUM PRESSURE ENCAPSULATED
VPI	VACUUM PRESSURE IMPREGNATED
VS	VOLTMETER SWITCH
VSD	VARIABLE SPEED DRIVE
VT	VOLTAGE TRANSFORMER
W	WATT(S), WIRE, WIDTH
W/	WITH
W/O	WITHOUT
WG	WATER GAGE
WHD	WATTHOUR DEMAND METER
WP	WEATHERPROOF
WPH	WORK PLANE HEIGHT
X	REACTANCE
%X	PERCENT REACTANCE
XFMR	TRANSFORMER
XLP	CROSS-LINK POLYETHYLENE INSULATION
Y	WYE-CONNECTED
Z	IMPEDANCE
%Z	PERCENT IMPEDANCE
1/C	SINGLE CONDUCTOR CABLE
3/C	THREE CONDUCTOR CABLE
SPST	SINGLE POLE-SINGLE THROW
DPST	DOUBLE POLE-SINGLE THROW
3PST	THREE POLE-SINGLE THROW
SPDT	SINGLE POLE-DOUBLE THROW
DPDT	DOUBLE POLE-DOUBLE THROW
3PDT	THREE POLE-DOUBLE THROW
2S1W	TWO SPEED, ONE WINDING
2S2W	TWO SPEED, TWO WINDING

PRELIMINARY DRAWING
FOR REVIEW ONLY - NOT FOR CONSTRUCTION

INCHES 1 2
CENTIMETERS 1 2 3 4 5 6

NATIONAL SCIENCE FOUNDATION
OFFICE OF POLAR PROGRAMS
WASHINGTON, D.C. NSF
CONTRACT OPP. 0000373

REVISION LOG

REV.	DATE	DESCRIPTION	DFTG.	APPD.
A	09/23/2016	30% DESIGN SUBMITTAL	JDS	RDP

MCMURDO STATION
BL010 - IT PRIMARY OPERATIONS FACILITY
ELECTRICAL

7400 South Tucson Way
Centennial, Colorado
80112 - 3938 USA
303 - 790 - 8606
800 - 688 - 8606
ASC ANTARCTIC SUPPORT CONTRACT

PROJECT NUMBER: 160604MCM010
FILE NAME: 160604MCM010E-005-RA
DESIGNED BY: BGJ
DRAWN BY: JDS
DATE CHECKED: 09/23/2016
SHEET TITLE: ABBREVIATIONS
SHEET NUMBER: E-005

1 2 3 4 5 6 7 8
D C B A

3 PHASE, 4 WIRE + EG(PE) - FEEDER/BRANCH CIRCUIT SCHEDULE FOR CONDUIT
NON-CURRENT CARRYING GROUNDED (NEUTRAL) CONDUCTOR

INDIVIDUAL-CONDUCTORS RATED AT 600 VOLT WITH 90C/75C THHN/THWN/XHHW INSULATION, IN MAX. 40C/30C AMBIENT AREA

SYMBOL	NO. OF SETS	COND	PHASE (AWG)	NEUTRAL (AWG)	EQPT GND (AWG)	MIN. CONDUIT SIZE	NOTES	REMARKS
15Y	1	4-1/C	12	12	12	3/4	1	
20Y	1	4-1/C	12	12	12	3/4		
25Y	1	4-1/C	10	10	10	3/4		
30Y	1	4-1/C	10	10	10	3/4		
35Y	1	4-1/C	8	8	10	1		
40Y	1	4-1/C	8	8	10	1		
45Y	1	4-1/C	8	8	10	1		
50Y	1	4-1/C	8	8	10	1		
60Y	1	4-1/C	6	6	10	1		
70Y	1	4-1/C	6	6	8	1 1/4		
80Y	1	4-1/C	4	4	8	1 1/4		
90Y	1	4-1/C	4	4	8	1 1/4		
100Y	1	4-1/C	3	3	8	1 1/4		
110Y	1	4-1/C	2	2	6	1 1/2		
125Y	1	4-1/C	2	2	6	1 1/2		
150Y	1	4-1/C	1/0	1/0	6	2	2-4	Use #4 AWG GND for CT Applications
175Y	1	4-1/C	2/0	2/0	6	2		Use #4 AWG GND for CT Applications
200Y	1	4-1/C	3/0	3/0	6	2		Use #4 AWG GND for CT Applications
225Y	1	4-1/C	4/0	4/0	4	2 1/2		
250Y	1	4-1/C	4/0	4/0	4	2 1/2		
300Y	1	4-1/C	250	250	4	2 1/2		
350Y	1	4-1/C	350	350	3	3		
400Y	1	4-1/C	500	500	3	3 1/2		
450Y	1	4-1/C	600	600	2	4		
500Y	2	4-1/C	4/0	4/0	2	2 1/2		
600Y	2	4-1/C	300	300	1	3		
700Y	2	4-1/C	400	400	1/0	3		
800Y	2	4-1/C	500	500	1/0	3 1/2		
900Y	3	4-1/C	350	350	2/0	3		
1000Y	3	4-1/C	400	400	2/0	3 1/2		
1200Y	4	4-1/C	350	350	3/0	3		
1600Y	5	4-1/C	400	400	4/0	3 1/2		
2000Y	6	4-1/C	400	400	250	3 1/2		
2500Y	6	4-1/C	600	600	350	4		
3000Y	8	4-1/C	500	500	400	3 1/2		
4000Y	11	4-1/C	500	500	500	4		
5000Y	12	4-1/C	600	600	600	4		

SCHEDULE NOTES:

1. APPLICABLE FOR CONDUIT INSTALLATIONS ONLY.
2. APPLICABLE FOR CONDUIT OR COMBINATION CONDUIT AND LADDER, VENTILATED, OR WIRE MESH CABLE TRAY INSTALLATIONS.
3. WHERE INSTALLED IN A PLENUM, ALL CONDUCTORS INSULATIONS SHALL BE PLENUM RATED.
4. WHERE INSTALLED IN CABLE TRAY, ALL CONDUCTOR INSULATIONS SHALL BE TC-ER RATED.

3 PHASE, 4 WIRE + EG(PE) - FEEDER/BRANCH CIRCUIT SCHEDULE FOR CONDUIT
CURRENT CARRYING GROUNDED (NEUTRAL) CONDUCTOR

INDIVIDUAL-CONDUCTORS RATED AT 600 VOLT WITH 90C/75C THHN/THWN/XHHW INSULATION, IN MAX. 40C/30C AMBIENT AREA

SYMBOL	NO. OF SETS	COND	PHASE (AWG)	NEUTRAL (AWG)	EQPT GND (AWG)	MIN. CONDUIT SIZE	NOTES	REMARKS
C15Y	1	4-1/C	12	12	12	3/4	1	
C20Y	1	4-1/C	12	12	12	3/4		
C25Y	1	4-1/C	10	10	10	3/4		
C30Y	1	4-1/C	10	10	10	3/4		
C35Y	1	4-1/C	8	8	10	1		
C40Y	1	4-1/C	8	8	10	1		
C45Y	1	4-1/C	8	8	10	1		
C50Y	1	4-1/C	6	6	10	1		
C60Y	1	4-1/C	6	6	10	1		
C70Y	1	4-1/C	4	4	8	1 1/4		
C80Y	1	4-1/C	3	3	8	1 1/4		
C90Y	1	4-1/C	3	3	8	1 1/4		
C100Y	1	4-1/C	2	2	8	1 1/2		
C110Y	1	4-1/C	1	1	6	1 1/2		
C125Y	1	4-1/C	1/0	1/0	6	2		
C150Y	1	4-1/C	2/0	2/0	6	2		
C175Y	1	4-1/C	3/0	3/0	6	2		
C200Y	1	4-1/C	4/0	4/0	6	2 1/2		
C225Y	1	4-1/C	250	250	4	2 1/2		
C250Y	1	4-1/C	350	350	4	3		
C300Y	1	4-1/C	400	400	4	3		
C350Y	1	4-1/C	600	600	3	4		
C400Y	2	4-1/C	4/0	4/0	3	2 1/2		
C450Y	2	4-1/C	250	250	2	3		
C500Y	2	4-1/C	350	350	2	3		
C600Y	2	4-1/C	400	400	1	3		
C700Y	2	4-1/C	600	600	1/0	4		
C800Y	3	4-1/C	350	350	1/0	3		
C900Y	3	4-1/C	500	500	2/0	3 1/2		
C1000Y	3	4-1/C	600	600	2/0	4		
C1200Y	4	4-1/C	500	500	3/0	3 1/2		
C1600Y	5	4-1/C	600	600	4/0	4		
C2000Y	6	4-1/C	600	600	250	4		
C2500Y	8	4-1/C	600	600	350	4		
C3000Y	10	4-1/C	500	500	400	3 1/2		
C4000Y	12	4-1/C	600	600	500	4		
C5000Y	15	4-1/C	600	600	600	4		

SCHEDULE NOTES:

1. APPLICABLE FOR CONDUIT INSTALLATIONS ONLY.
2. APPLICABLE FOR CONDUIT OR COMBINATION CONDUIT AND LADDER, VENTILATED, OR WIRE MESH CABLE TRAY INSTALLATIONS.
3. WHERE INSTALLED IN A PLENUM, ALL CONDUCTORS INSULATIONS SHALL BE PLENUM RATED.
4. WHERE INSTALLED IN CABLE TRAY, ALL CONDUCTOR INSULATIONS SHALL BE TC-ER RATED.

3 PHASE, 3 WIRE + EG(PE) - FEEDER/BRANCH CIRCUIT SCHEDULE FOR CONDUIT

INDIVIDUAL-CONDUCTORS RATED AT 600 VOLT WITH 90C/75C THHN/THWN/XHHW INSULATION, IN MAX. 40C/30C AMBIENT AREA

SYMBOL	NO. OF SETS	COND	PHASE (AWG)	NEUTRAL (AWG)	EQPT GND (AWG)	MIN. CONDUIT SIZE	NOTES	REMARKS
15D	1	3-1/C	12	--	12	1/2	1	
20D	1	3-1/C	12	--	12	1/2		
25D	1	3-1/C	10	--	10	3/4		
30D	1	3-1/C	10	--	10	3/4		
35D	1	3-1/C	8	--	10	3/4		
40D	1	3-1/C	8	--	10	3/4		
45D	1	3-1/C	8	--	10	3/4		
50D	1	3-1/C	8	--	10	3/4		
60D	1	3-1/C	6	--	10	1		
70D	1	3-1/C	6	--	8	1		
80D	1	3-1/C	4	--	8	1 1/4		
90D	1	3-1/C	4	--	8	1 1/4		
100D	1	3-1/C	3	--	8	1 1/4		
110D	1	3-1/C	2	--	6	1 1/4		
125D	1	3-1/C	2	--	6	1 1/4		
150D	1	3-1/C	1/0	--	6	1 1/2	2-4	Use #4 AWG GND for CT Applications
175D	1	3-1/C	2/0	--	6	2		Use #4 AWG GND for CT Applications
200D	1	3-1/C	3/0	--	6	2		Use #4 AWG GND for CT Applications
225D	1	3-1/C	4/0	--	4	2		
250D	1	3-1/C	4/0	--	4	2		
300D	1	3-1/C	250	--	4	2 1/2		
350D	1	3-1/C	350	--	3	2 1/2		
400D	1	3-1/C	500	--	3	3		
450D	1	3-1/C	600	--	2	3 1/2		
500D	2	3-1/C	4/0	--	2	2		
600D	2	3-1/C	300	--	1	2 1/2		
700D	2	3-1/C	400	--	1/0	3		
800D	2	3-1/C	500	--	1/0	3		
900D	3	3-1/C	350	--	2/0	3		
1000D	3	3-1/C	400	--	2/0	3		
1200D	4	3-1/C	350	--	3/0	3		
1600D	5	3-1/C	400	--	4/0	3		
2000D	6	3-1/C	400	--	250	3		
2500D	6	3-1/C	600	--	350	3 1/2		
3000D	8	3-1/C	500	--	400	3 1/2		
4000D	11	3-1/C	500	--	500	3 1/2		
5000D	12	3-1/C	600	--	600	4		

SCHEDULE NOTES:

1. APPLICABLE FOR CONDUIT INSTALLATIONS ONLY.
2. APPLICABLE FOR CONDUIT OR COMBINATION CONDUIT AND LADDER, VENTILATED, OR WIRE MESH CABLE TRAY INSTALLATIONS.
3. WHERE INSTALLED IN A PLENUM, ALL CONDUCTORS INSULATIONS SHALL BE PLENUM RATED.
4. WHERE INSTALLED IN CABLE TRAY, ALL CONDUCTOR INSULATIONS SHALL BE TC-ER RATED.

PRELIMINARY DRAWING
FOR REVIEW ONLY - NOT FOR CONSTRUCTION

INCHES 1 2
CENTIMETERS 1 2 3 4 5 6

NATIONAL SCIENCE FOUNDATION
OFFICE OF POLAR PROGRAMS
WASHINGTON, D.C. NSF
CONTRACT OPP. 0000373

REVISION LOG

REV.	DATE	DESCRIPTION	DFTG.	APPD.
A	09/23/2016	30% DESIGN SUBMITTAL	JDS	RDP

MCMURDO STATION
BL010 - IT PRIMARY OPERATIONS FACILITY
ELECTRICAL

7400 South Tucson Way
Centennial, Colorado
80112 - 3938 USA
303 - 790 - 8606
800 - 688 - 8606
ASC ANTARCTIC SUPPORT CONTRACT

PROJECT NUMBER: 160604MCM010
FILE NAME: 160604MCM010E-007-RA
DESIGNED BY: BGJ
DRAWN BY: JDS
DATE CHECKED: 09/23/2016
SHEET TITLE: TRANSFORMER AND FEEDER / BRANCH CIRCUIT SCHEDULE
SHEET NUMBER: E-007

A - EQUIPMENT LIST - ELECTRICAL

REV NO.	EXISTING EQUIPMENT NAME/ NUMBER	NEW EQUIPMENT NAME/ NUMBER	EQUIPMENT DESCRIPTION	REFERENCE P&ID NO.	INFO STATUS 1 2 3	ELECTRICAL PROPERTIES (ONE ONLY) FLA	HP	KW	RLA	VOLTS	PHASE	HERTZ	PKGE. UNIT (Y/N)	ELEC. AND I&C PROVIDED EQUIPMENT DISCONNECT (Y/N)	ELEC. AND I&C PROVIDED EQUIPMENT STARTER (Y/N)	ELEC. AND I&C PROVIDED EQUIPMENT CONTROLS (Y/N)	POWER SOURCE(S) NORMAL (Y/N)	POWER SOURCE(S) EMERGENCY(700) (Y/N)	POWER SOURCE(S) LEGALLY REQUIRED STANDBY (701) (Y/N)	POWER SOURCE(S) OPTIONAL STANDBY (702) (Y/N)	POWER SOURCE(S) C.O.P.S. (708) (Y/N)	METERING/ TELECOM OUTLET	FIRE ALARM	SPECIAL ELECTRICAL / CONTROLS INSTRUCTIONS
	(E)OH DOOR		6. 3 HP				3			208 V														
	(E)UH-1		1. 1/6 HP				0.16			115 V														
	(E)CHU-1		12. 1/30 HP				0.3			115 V														
	(E)EF-3		1. 1/6 HP				0.16			115 V														
	(E)EF-4		1. 1/6 HP				0.16			115 V														
	(E)LIFT STATION		1. 1/6 HP				0.16			115 V														
	(E)CHU-1		12. 1/30 HP				0.3			115 V														
	(E)UH-1		1. 1/6 HP				0.16			115 V														
	(E)CHU-1		12. 1/30 HP				0.3			115 V														
	(E)EF-2		1. 1/6 HP				0.16			115 V														
	(E)UH-1		1. 1/6 HP				0.16			115 V														
	(E)EF-8		1. 1/6 HP				0.16			115 V														
	(E)OH DOOR		2. 3/4 HP				0.75			208 V														
	(E)UH-1		1. 1/6 HP				0.16			115 V														
	(E)AHU-1		5. 2 HP				2			208 V														
	(E)MUA-2		5. 2 HP				2			208 V														
	(E)UH-1		1. 1/6 HP				0.16			115 V														
	(E)OH DOOR		4. 1/2 HP				0.5			115 V														
	(E)CP-5		2. 1/4 HP				0.25			115 V														
	(E)EF-1		4. 1/2 HP				0.5			115 V														
	(E)OH DOOR		22. 1/3 HP				0.33			208 V														
	(E)UH-3		1. 1/6 HP				0.16			115 V														
	(E)UH-3		1. 1/6 HP				0.16			115 V														
	(E)CP-6		2. 1/4 HP				0.25			115 V														
	(E)CP-5		2. 1/4 HP				0.25			115 V														
	(E)GP-1		4. 1/2 HP				0.5			115 V														
	(E)CP-4		9. 3 HP				3			115 V														
	(E)CP-1		9. 3 HP				3			115 V														
	(E)CP-2		9. 3 HP				3			115 V														
	(E)CP-3		9. 3 HP				3			115 V														
		CP-3A	1. 1/6 HP				0.16			115 V														
		CP-3B	1. 1/6 HP				0.16			115 V														
		CP-4A	1. 1/6 HP				0.16			115 V														
		CP-4B	1. 1/6 HP				0.16			115 V														
		CP-6A	1. 1/6 HP				0.16			115 V														
		CP-6B	1. 1/6 HP				0.16			115 V														
		DAMPER	2. 1/4 HP				0.25			115 V														
		DAMPER	2. 1/4 HP				0.25			115 V														
		DAMPER	2. 1/4 HP				0.25			115 V														
		UH-1	1. 1/6 HP				0.16			115 V														
		UH-1	1. 1/6 HP				0.16			115 V														
		UH-1	1. 1/6 HP				0.16			115 V														
		UH-1	1. 1/6 HP				0.16			115 V														
		UH-1	1. 1/6 HP				0.16			115 V														
		UH-1	1. 1/6 HP				0.16			115 V														
		UH-1	1. 1/6 HP				0.16			115 V														
		UH-1	1. 1/6 HP				0.16			115 V														
		UH-2	1. 1/6 HP				0.16			115 V														
		VF-X	1. 1/6 HP				0.16			115 V														
		VF-X	1. 1/6 HP				0.16			115 V														

PRELIMINARY DRAWING
FOR REVIEW ONLY - NOT FOR CONSTRUCTION

INCHES 1 2
CENTIMETERS 1 2 3 4 5 6

NATIONAL SCIENCE FOUNDATION
OFFICE OF POLAR PROGRAMS
WASHINGTON, D.C. NSF
CONTRACT OPP. 0000373

REVISION LOG

REV.	DATE	DESCRIPTION	DFTG.	APPD.
A	09/23/2016	30% DESIGN SUBMITTAL	JDS	RDP

MCMURDO STATION
BL010 - IT PRIMARY OPERATIONS FACILITY
ELECTRICAL

7400 South Tucson Way
Centennial, Colorado
80112 - 3938 USA
303 - 790 - 8606
800 - 688 - 8606

ASC ANTARCTIC SUPPORT CONTRACT

PROJECT NUMBER: 160604MCM010
FILE NAME: 160604MCM010E-008-RA
DESIGNED BY: BGJ
DRAWN BY: JDS
DATE CHECKED: 09/23/2016
SHEET TITLE: MECHANICAL EQUIPMENT CONNECTION SCHEDULE
SHEET NUMBER: E-008

SHEET NOTES

1. 30% DESIGN. SEE BASIS OF DESIGN FOR GENERAL POWER REQUIREMENTS, RECEPTACLES, ETC.
2. TELECOMMUNICATION OUTLETS INDICATED ON POWER PLAN DRAWINGS TO SHOW TELECOMMUNICATION OUTLET LOCATIONS WITH RESPECT TO RECEPTACLE LOCATIONS, SEE SIGNALING PLAN DRAWINGS FOR ADDITIONAL INFORMATION.

SHEET KEYNOTES ◇1

1. XXXX

1 LEVEL 1 - POWER PLAN - AREA C

1/8" = 1'-0"

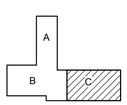

KEY PLAN

8 0 8 16

Scale: 1/8 INCH = 1 FOOT

N

PRELIMINARY DRAWING

FOR REVIEW ONLY - NOT FOR CONSTRUCTION

INCHES 1 2

CENTIMETERS 1 2 3 4 5 6

NATIONAL SCIENCE FOUNDATION

OFFICE OF POLAR PROGRAMS
WASHINGTON, D.C. NSF
CONTRACT OPP. 0000373

REVISION LOG

REV.	DATE	DESCRIPTION	DFTG.	APPD.
A	09/23/2016	30% DESIGN SUBMITTAL	JDS	RDP

MCMURDO STATION
BL010 - IT PRIMARY OPERATIONS FACILITY

ELECTRICAL

7400 South Tucson Way
Centennial, Colorado
80112 - 3938 USA
303 - 790 - 8606
800 - 688 - 8606

ASC ANTARCTIC SUPPORT CONTRACT

PROJECT NUMBER: 160604MCM010

FILE NAME: 160604MCM010E-131-RA

DESIGNED BY: BGJ

DRAWN BY: JDS

DATE CHECKED: 09/23/2016

SHEET TITLE: LEVEL 1 - DATA CENTER - POWER

SHEET NUMBER: E-131

1 2 3 4 5 6 7 8

A B C D

SHEET NOTES

1. 30% DESIGN. SEE BASIS OF DESIGN FOR GENERAL POWER REQUIREMENTS, RECEPTACLES, ETC.
2. TELECOMMUNICATION OUTLETS INDICATED ON POWER PLAN DRAWINGS TO SHOW TELECOMMUNICATION OUTLET LOCATIONS WITH RESPECT TO RECEPTACLE LOCATIONS, SEE SIGNALING PLAN DRAWINGS FOR ADDITIONAL INFORMATION.
3. RECEPTACLES IN XXX SHALL BE POSITIONED 48" ABOVE FINISHED FLOOR.

SHEET KEYNOTES 1

1. XXXX

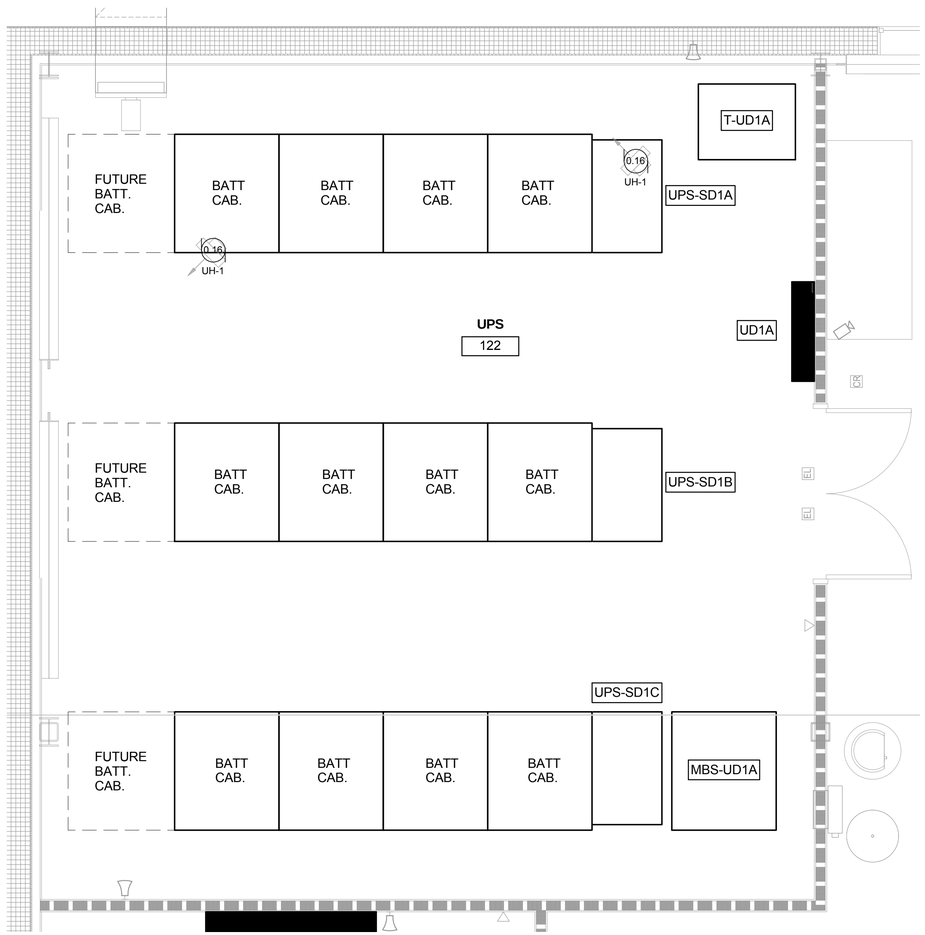

1 - **LARGE SCALE - UPS ROOM 117**
3/8" = 1'-0"

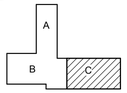

KEY PLAN

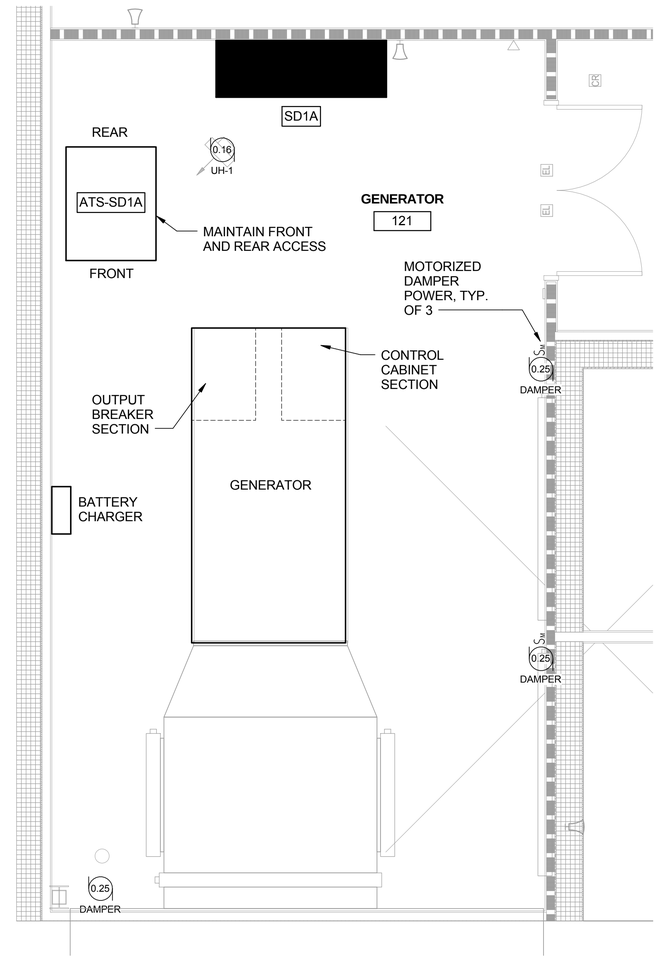

2 - **LARGE SCALE - GENERATOR ROOM 110**
3/8" = 1'-0"

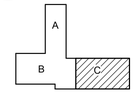

KEY PLAN

2 0 2 4 6
Scale: 3/8 INCH = 1 FOOT

PRELIMINARY DRAWING
FOR REVIEW ONLY - NOT FOR CONSTRUCTION

INCHES 1 2
CENTIMETERS 1 2 3 4 5 6

NATIONAL SCIENCE FOUNDATION
OFFICE OF POLAR PROGRAMS
WASHINGTON, D.C. NSF
CONTRACT OPP. 0000373

REVISION LOG

REV.	DATE	DESCRIPTION	DFTG.	APPD.
A	09/23/2016	30% DESIGN SUBMITTAL	JDS	RDP

MCMURDO STATION
BL010 - IT PRIMARY OPERATIONS FACILITY
ELECTRICAL

7400 South Tucson Way
Centennial, Colorado
80112 - 3938 USA
303 - 790 - 8606
800 - 688 - 8606
ASC ANTARCTIC SUPPORT CONTRACT

PROJECT NUMBER: 160604MCM010
FILE NAME: 160604MCM010E-402-RA
DESIGNED BY: BGJ
DRAWN BY: JDS
DATE CHECKED: 09/23/2016
SHEET TITLE: ELECTRICAL LARGE SCALE PLANS - PHASE 1
SHEET NUMBER: E-402

1 2 3 4 5 6 7 8
D C B A

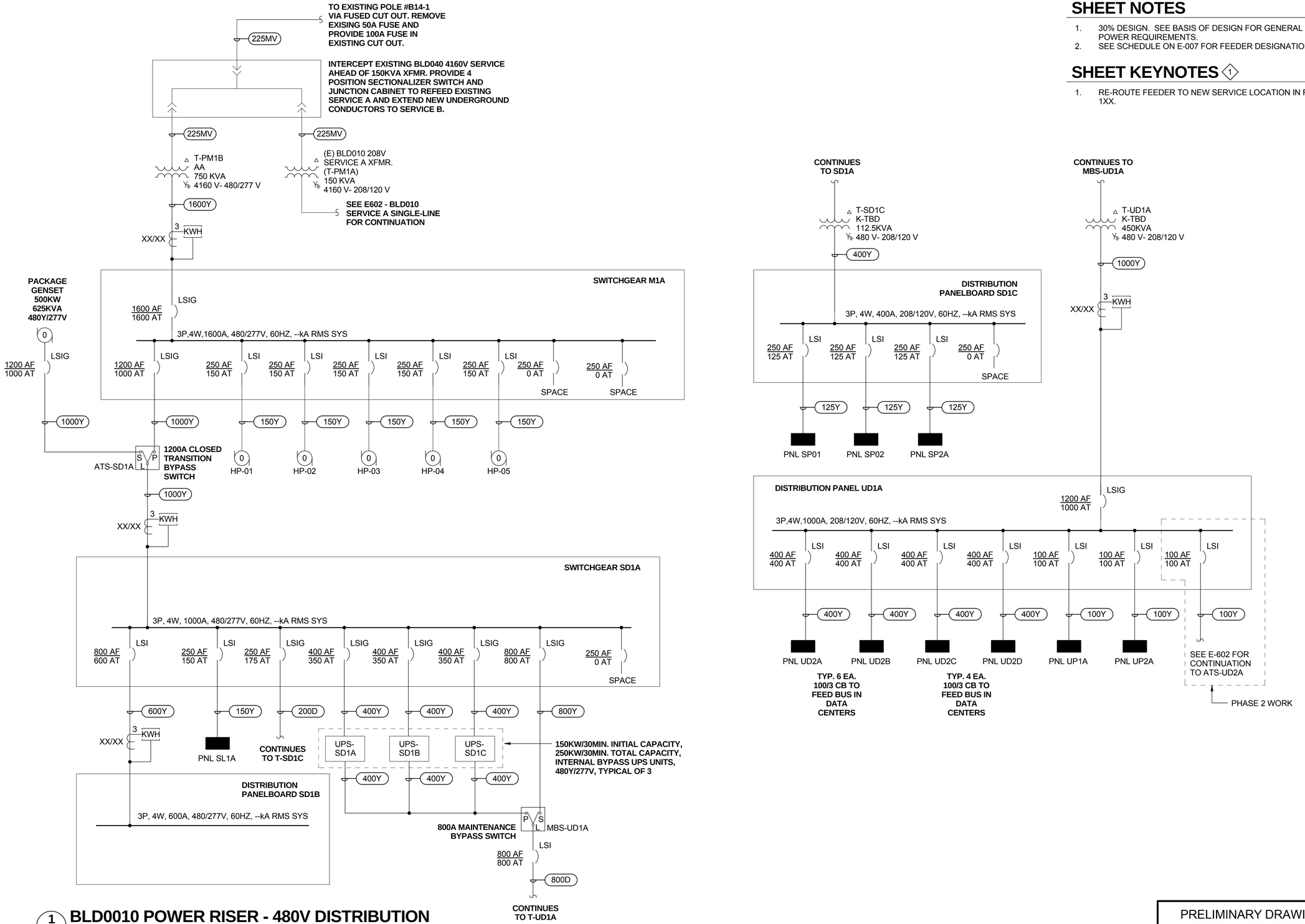

1 - BLD0010 POWER RISER - 480V DISTRIBUTION
NO SCALE

SHEET NOTES

1. 30% DESIGN. SEE BASIS OF DESIGN FOR GENERAL POWER REQUIREMENTS.
2. SEE SCHEDULE ON E-007 FOR FEEDER DESIGNATIONS.

SHEET KEYNOTES 1

1. RE-ROUTE FEEDER TO NEW SERVICE LOCATION IN ROOM 1XX.

PRELIMINARY DRAWING
FOR REVIEW ONLY - NOT FOR CONSTRUCTION

INCHES 1 2
CENTIMETERS 1 2 3 4 5 6

NATIONAL SCIENCE FOUNDATION
OFFICE OF POLAR PROGRAMS
WASHINGTON, D.C. NSF
CONTRACT OPP. 0000373

REVISION LOG

REV.	DATE	DESCRIPTION	DFTG.	APPD.
A	09/23/2016	30% DESIGN SUBMITTAL	JDS	RDP

MCMURDO STATION
BL010 - IT PRIMARY OPERATIONS FACILITY
ELECTRICAL

7400 South Tucson Way
Centennial, Colorado
80112 - 3938 USA
303 - 790 - 8606
800 - 688 - 8606
ASC ANTARCTIC SUPPORT CONTRACT

PROJECT NUMBER: 160604MCM010
FILE NAME: 160604MCM010E-601-RA
DESIGNED BY: BGJ
DRAWN BY: JDS
DATE CHECKED: 09/23/2016
SHEET TITLE: BLD010 POWER SINGLE-LINE DIAGRAM – 480V SERVICE B
SHEET NUMBER: E-601

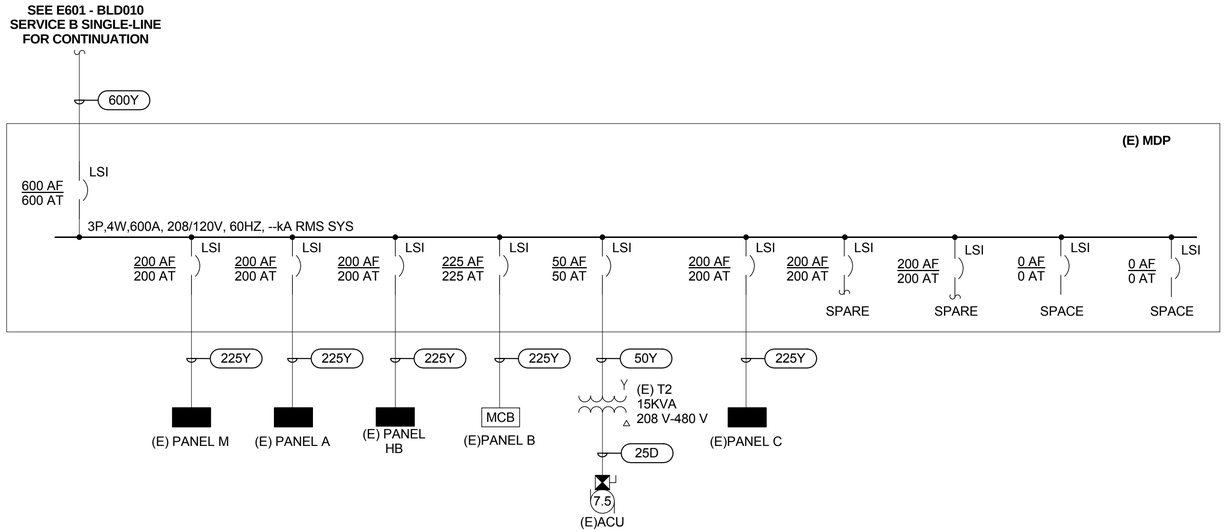

1 EXISTING BLDG 010 SERVICE A POWER SINGLE LINE

NO SCALE

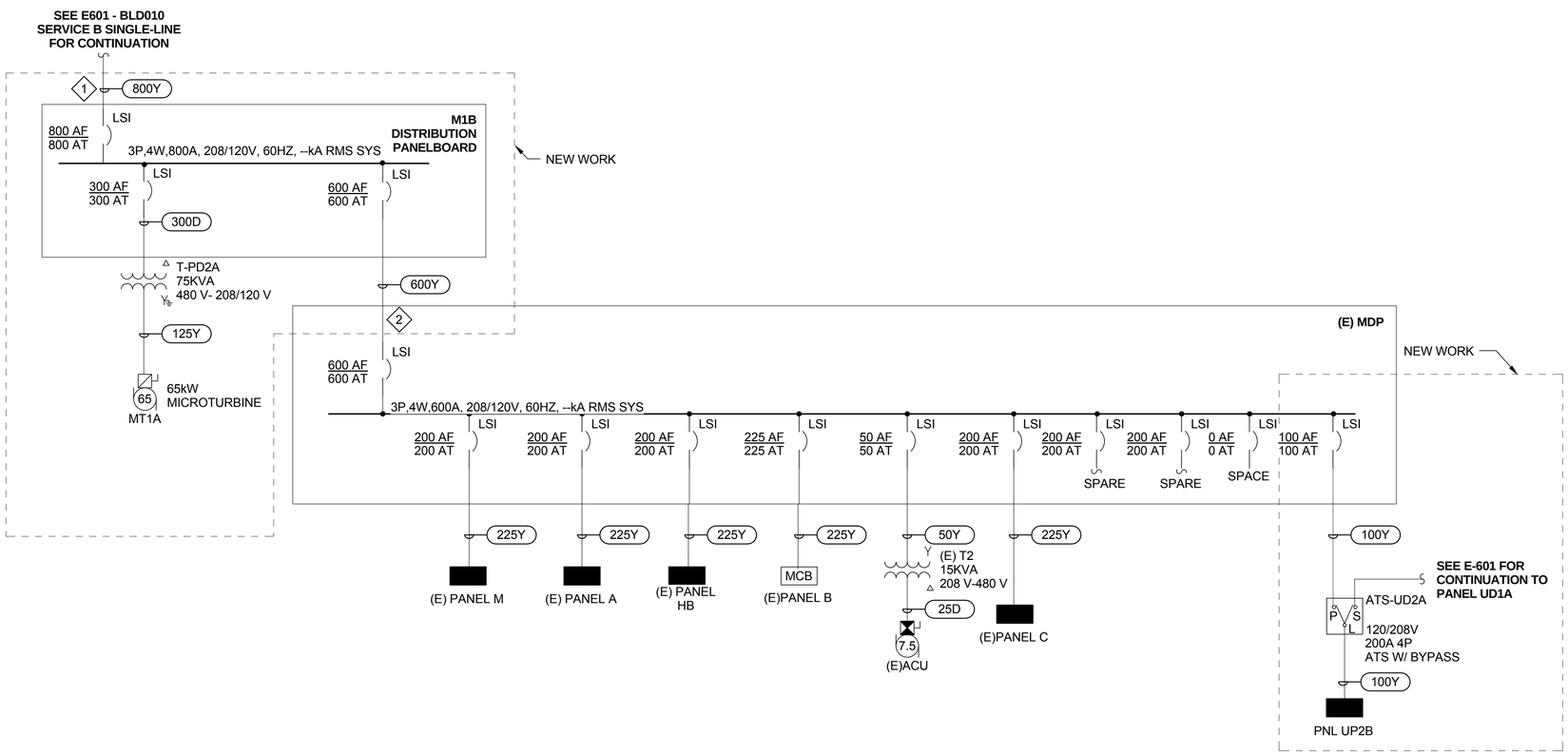

2 NEW BLDG 010 SERVICE A POWER SINGLE LINE

NO SCALE

SHEET NOTES

1. 30% DESIGN. SEE BASIS OF DESIGN FOR GENERAL POWER REQUIREMENTS.
2. SEE SCHEDULE ON E-007 FOR FEEDER DESIGNATIONS.

SHEET KEYNOTES 1

1. RE-ROUTE FEEDER TO NEW SERVICE LOCATION IN ROOM 1XX
2. RECONNECT FEEDER TO EXISTING MDP MAIN CIRCUIT BREAKER.

PRELIMINARY DRAWING
FOR REVIEW ONLY - NOT FOR CONSTRUCTION

INCHES 1 2
CENTIMETERS 1 2 3 4 5 6

NATIONAL SCIENCE FOUNDATION
OFFICE OF POLAR PROGRAMS
WASHINGTON, D.C. NSF
CONTRACT OPP. 0000373

REVISION LOG

REV.	DATE	DESCRIPTION	DFTG.	APPD.
A	09/23/2016	30% DESIGN SUBMITTAL	JDS	RDP

MCMURDO STATION
BL010 - IT PRIMARY OPERATIONS FACILITY
ELECTRICAL

7400 South Tucson Way
Centennial, Colorado
80112 - 3938 USA
303 - 790 - 8606
800 - 688 - 8606
ASC ANTARCTIC SUPPORT CONTRACT

PROJECT NUMBER: 160604MCM010
FILE NAME: 160604MCM010E-602-RA
DESIGNED BY: BGJ
DRAWN BY: JDS
DATE CHECKED: 09/23/2016
SHEET TITLE: BLD010 POWER SINGLE-LINE DIAGRAM – 208V SERVICE A
SHEET NUMBER: E-602

COMMUNICATIONS SYMBOLS

SYMBOLS	DESCRIPTION
▽	TELECOMMUNICATIONS OUTLET, 8 PIN, RJ45 TYPE, VOICE. W DENOTES WALL MOUNTED 54" AFF WITH SINGLE GANG FACEPLATE.
▼	TELECOMMUNICATIONS OUTLET, 8 PIN, RJ45 TYPE, FOUR (4) VOICE/DATA OUTLETS TO BE MOUNTED 18" AFF UNLESS OTHERWISE NOTED.
▼	TELECOMMUNICATIONS OUTLET, 8 PIN, RJ45 TYPE, DATA. BAS INDICATES BUILDING AUTOMATION SYSYEM.
▼	TELECOMMUNICATIONS OUTLET, 8 PIN, RJ45 TYPE, TWO (2) VOICE/DATA OUTLETS IN SINGLE-GANG FLOOR BOX, MOUNTED FLUSH UNLESS OTHERWISE NOTED.
	CABLE TRAY, SIZE AS INDICATED ON PLANS. WELDED WIRE TYPE FOR DISTRIBUTION OF CABLING OUTSIDE TELECOMMUNICATION ROOM.
	LADDER RACK, SIZE AS INDICATED ON PLANS. WELDED LADDER TYPE FOR DISTRIBUTION OF CABLING INSIDE TELECOMMUNICATION ROOM.
	FREESTANDING 2 POST COMMUNICATIONS RACK
	FREESTANDING 4 POST COMMUNICATIONS RACK
	COMMUNICATIONS CABINET
	TMGB OR TGB AS INDICATED ON PLANS
WAP	WIRELESS LAN ACCESS POINT
CEL	CELLULAR REPEATER JUNCTION BOX, MOUNTED AT CEILING DECK
LMR	LMR REPEATER JUNCTION BOX, MOUNTED AT CEILING DECK
PB	TELECOMMUNICATION PULL BOX
J	TELECOMMUNICATIONS JUNCTION BOX, MOUNT AT 18" AFF UNLESS OTHERWISE NOTED.
	CONDUIT AND CONDUCTORS ABOVE GRADE
	CONDUIT AND CONDUCTORS BELOW GRADE OR SLAB
	CONDUIT DOWN
	CONDUIT UP
	CONDUIT, STUBBED AND CAPPED
	EXISTING CONDUIT AND/OR WIRE TO BE REMOVED
	EXISTING CONDUIT AND/OR WIRE TO REMAIN (SHOWN LIGHT)
	HOMERUN CONDUIT
	CONDUIT STUB-OUT
1	KEYED NOTE
1	EQUIPMENT REFERENCE NUMBER
1	REVISION NUMBER
O-Z	CABLE CALL-OUT INDICATING QUANTITY OF CABLES AND CABLE TYPE
X / -	DETAIL OR ENLARGED PLAN CALLOUT.
	CHAINLINK FENCE

AUDIOVISUAL SYMBOLS

SYMBOLS	DESCRIPTION
FB	A/V FLOOR BOX PLATE
CAM	WALL MOUNTED VIDEO CONFERENCE CAMERA (MOUNTED 70" AFF ON CENTER)
CCC	COMMAND & CONTROL CONSOLE
	55" IPTV FLAT PANEL DISPLAY, MOUNTED 60" AFF ON CENTER, UNO
FPD1 +Z AFF	IPTV DISPLAY (TYPE X, MOUNTED Z UNITS AFF ON CENTER)
FPD2 +Z AFF	EOC DISPLAY (TYPE X, MOUNTED Z UNITS AFF ON CENTER)
FPD3 +Z AFF	80" LED MONITOR (TYPE X, MOUNTED Z UNITS AFF ON CENTER)
PAD	32" PUBLIC AREA DISPLAY, MOUNTED 44" AFF ON CENTER, UNO
S1	WALL MOUNTED LOUDSPEAKER, MOUNTED 9' AFF ON CENTER, UNO
PS_1	WALL MOUNTED PAGING STATION, MOUNTED 48" AFF ON CENTER, UNO
PS_2	DESK PAGING STATION
WC	AUDIO SYSTEM SOURCE SELECTION AND VOLUME WALL CONTROLLER, MOUNTED 48" AFF ON CENTER, UNO
S1	CEILING SPEAKER
M	CEILING MOUNTED MICROPHONE

SECURITY SYMBOLS

SYMBOLS	DESCRIPTION
CR	CARD READER, WALL MOUNTED AT 42" AFF ON SINGLE GANG BACKBOX WITH SPACER
EL	ELECTRONIC MORTISE LOCK. INCLUDES OPTION REQUEST TO EXIT SWITCH, DOOR POSITION SWITCH, AND LATCH BOLT MONITOR
DC	DOOR POSITION SWITCH, OVERHEAD DOOR SURFACE MOUNTED. INSTALL WITH STEEL FLEXIBLE CONDUIT TO NEAREST JUNCTION BOX
	FIXED INTERIOR CCTV SECURITY CAMERA

TELEPHONY SYMBOLS

SYMBOLS	DESCRIPTION
TC	IP TELEPHONE CONSOLE
TCS	IP TELEPHONE CONFERENCE STATION
IC	INTERCOM CALL FOR HELP STATION. FULL DUPLEX, HANDS-FREE VOIP, SIP-COMPLIANT, POE POWERED TELEPHONE. FLUSH-MOUNT SO THAT CONTROLS ARE LESS THAN 54" AFF.

PRELIMINARY DRAWING
FOR REVIEW ONLY - NOT FOR CONSTRUCTION

INCHES 1 2
CENTIMETERS 1 2 3 4 5 6

NATIONAL SCIENCE FOUNDATION
OFFICE OF POLAR PROGRAMS
WASHINGTON, D.C. NSF
CONTRACT OPP. 0000373

REVISION LOG

REV.	DATE	DESCRIPTION	DFTG.	APPD.
A	09/23/2016	30% DESIGN SUBMITTAL		

MCMURDO STATION
BL 010: IT&C PRIMARY OPS FACILITY
TELECOM

7400 South Tucson Way
Centennial, Colorado
80112 - 3938 USA
303 - 790 - 8606
800 - 688 - 8606

ASC ANTARCTIC SUPPORT CONTRACT

PROJECT NUMBER: 160604MCM010
FILE NAME: 160604MCM010T-000-RA
DESIGNED BY: LLM
DRAWN BY: BRT
DATE CHECKED: 9/23/16
SHEET TITLE: LEGEND
SHEET NUMBER: T-000

1 2 3 4 5 6 7 8
D C B A

GENERAL NOTES (CONT'D)

1. DO NOT SCALE DRAWINGS. VERIFY DIMENSIONS IN FIELD PRIOR TO COMMENCEMENT OF WORK.
2. EXISTING EQUIPMENT TO REMAIN IS SHOWN LIGHT. NEW EQUIPMENT IS SHOWN HEAVY.
3. CONTRACTOR SHALL VISIT SITE PRIOR TO BID AND VERIFY THAT CONDITIONS ARE AS INDICATED. CONTRACTOR SHALL INCLUDE IN BID COSTS REQUIRED TO MAKE WORK MEET EXISTING CONDITIONS.
4. THE OWNER RESERVES FIRST CHOICE TO KEEP EXISTING EQUIPMENT AND MATERIALS. COORDINATE WITH OWNER AND DELIVER DESIGNATED EQUIPMENT AND MATERIALS REMOVED UNDER THIS CONTRACT TO OWNERS DESIGNATED STORAGE AREA. REMAINING EQUIPMENT AND MATERIAL REMOVED SHALL BECOME PROPERTY OF THE CONTRACTOR.
5. PROVIDE LOW VOLTAGE DEMOLITION AS REQUIRED. REFER TO ARCHITECTURAL DEMOLITION DRAWINGS FOR LOCATION AND EXTENT OF DEMOLITION REQUIRED. CONTRACTOR SHALL VISIT SITE PRIOR TO BID TO DETERMINE EXTENT OF WORK INVOLVED. PROVIDE LABOR AND MATERIALS AS REQUIRED TO MAINTAIN AND OR RESTORE CONTINUITY OF EXISTING LOW VOLTAGE SERVICES.
6. CONTRACTOR SHALL PROVIDE ALL NECESSARY DEMOLITION TO REMOVE EXISTING UNUSED CONDUIT, WIRE, CABLE, JUNCTION BOXES, ETC; REUSE AS REQUIRED.
7. LOW VOLTAGE SERVICE OUTAGES SHALL BE PERMITTED ONLY AT TIMES APPROVED BY IN WRITING.
8. LOW VOLTAGE SERVICE SHALL BE MAINTAINED TO EXISTING AREAS DURING CONSTRUCTION. CONTRACTOR SHALL PROVIDE CABLES AND TERMINATION ETC AS REQUIRED TO MAINTAIN CONTINUITY OF SERVICE.
9. LOW VOLTAGE CABLING CONTRACTOR SHALL COORDINATE WITH THE FIRE ALARM VENDOR AND SERVICE REPRESENTATIVE FOR THE PROPERTY AND PROVIDE CABLING TO REESTABLISH FIRE ALARM BACKBONE INTERCONNECTION FOR THE CABLING THAT MIGHT BE DISRUPTED BY THE NEW CONSTRUCTION.
10. PROVIDE RECORD DRAWINGS TO ARCHITECT. DRAWINGS SHALL INCLUDE PULLBOXES, BACKBONE INTERCEPTING, STUB UP LOCATIONS AND ROUTING, ETC.
11. THE WORK SHALL BE PERFORMED IN COMPLIANCE WITH THE APPLICABLE PROVISIONS OF THE 2015 INTERNATIONAL BUILDING CODE, THE 2015 INTERNATIONAL ENERGY CONSERVATION CODE (IECC),THE 2015 UNIFORM PLUMBING CODE, THE 2015 UNIFORM MECHANICAL CODE, THE 2014 NATIONAL ELECTRIC CODE AND THE NATIONAL FIRE PROTECTION ASSOCIATION (NFPA REGULATIONS).
12. CONDUIT INSTALLATION SHALL BE IN STRICT COMPLIANCE WITH TIA 569 STANDARD. CABLE INSTALLATION SHALL BE IN STRICT COMPLIANCE WITH TIA 568 B.1, B.2 AND B.3.
13. ALL CABLING, PATHWAY, GROUND BUSSES AND TERMINATION HARDWARE, RACKS AND CABINETS SHALL BE PROVIDED WITH IDENTIFICATION (LABELING) IN ACCORDANCE WITH TIA 606 STANDARD.
14. ALL FIBER OPTIC CABLE ROUTED IN CONDUIT SHALL BE INSTALLED IN INNER DUCT.
15. EQUIPMENT LOCATION AND DUCT/PATHWAY ROUTING INDICATED ON DRAWINGS IS FOR GENERAL REFERENCE ONLY. CONTRACTOR SHALL FIELD COORDINATE AND VERIFY EXACT ROUTING AS REQUIRED.
16. CONTRACTOR SHALL MAINTAIN SEPARATION FROM ELECTRICAL FEEDERS, ELECTRONIC BALLASTS, TRANSFORMERS, ETC. TO MINIMIZE ELECTO-MAGNETIC INTERFERENCE ISSUES.
17. ANY CONDUIT OR TRUNKING RUN INDICATED ON THE TELECOMMUNICATION DRAWINGS SHALL BE PROVIDED BY THE ELECTRICAL CONTRACTOR AND SIZED PER APPLICABLE REVISION OF THE NEC. BEND RADIUS OF CONDUIT LESS THAN 2" IS 6 TIMES INTERNAL CONDUIT DIAMETER, AND GREATER THAN 2" IS 10 TIMES INTERNAL CONDUIT DIAMETER, AND CONDUIT SHALL HAVE NO MORE THAN 180 DEGREE CUMULATIVE BEND BETWEEN PULL POINTS. PULL BOXES MAY NOT BE USES IN PLACE OF BENDS AND IF THE RUN IS MORE THAN 30 METERS (98'-5"), A JUNCTION BOX IS REQUIRED. JUNCTION BOXES SHALL BE SIZED PER REQUIREMENTS OF THE LOCAL AND STATE AUTHORITY HAVING JURISDICTION.
18. VERIFY DIMENSIONS IN FIELD PRIOR TO COMMENCEMENT OF WORK. COORDINATE ALL DEVICES WITH INTERIOR DESIGN AND ARCHITECTURAL DRAWINGS.
19. ALL EMPTY RACEWAY SYSTEMS SHALL HAVE A 1/8" PULL-STRING WITH A TENSILE STRENGTH OF 200 POUNDS AND SHALL BE INDENTIFIED AT ALL JUNCTION, PULL AND TERMINATION POINTS, USING PERMANENT METALLIC TAGS. TAGS SHALL INDICATE INTENDED USE OF CONDUIT, ORIGINATION AND TERMINATION POINT OF EACH INDIVDUAL CONDUIT. CAP OPEN ENDS NOT TERMINATED IN A JUNCTION BOX.
20. CONTRACTOR SHALL REVIEW ARCHITECTURAL, STRUCTURAL, MEP AND OTHER DRAWINGS IN RELATION TO THIS SCOPE.
21. PROVIDE PERMITS AND INSPECTIONS AS REQUIRED.
22. LOW LEVEL AUDIO CABLES, CONTROL CABLES, VIDEO CABLES AND HIGH LEVEL SPEAKER CABLES SHALL BE ROUTED IN SEPARATE GALVANIZED STEEL CONDUITS, EACH WITH A MINIMUM OF 6" SPACING. VERIFY IN WRITING THE COMBINING OF HOME RUN CABLES WITH THE AUDIOVISUAL DESIGN CONSULTANT PRIOR TO INSTALLATION.
23. ALL AUDIOVISUAL SYSTEMS CABLE RUNS MUST BE CONTINUOUS FROM SOURCE TO DESTINATION WITHOUT SPLICES.
24. THE CONTRACTOR SHALL PROVIDE LISTED CABLES NON-PLENUM CABLES SHALL BE USED ONLY WHEN INSTALLED IN CONDUIT AS REQUIRED BY LOCAL AND NATIONAL CODES AND BY THE AUTHORITY HAVING JURISDICTION.
27. THE CONTRACTOR SHALL INSURE THAT ALL ELECTRONIC EQUIPMENT ROOMS BE CLEAN AND DUST FREE PRIOR TO INSTALLATION OF ANY ELECTRONIC EQUIPMENT AND SHALL INSURE THAT THE ROOMS MAINTAIN A CLEAN AND DUST FREE ENVIRONMENT UNTIL TURNED OVER AND ACCEPTED BY THE OWNER.
28. THE CONTRACTOR SHALL PROVIDE A MINIMUM OF 12" UNOBSTRUCTED ACCESS FROM THE TOP OF ALL AUDIOVISUAL SYSTEM RACKS OR CABINET ASSEMBLIES TO THE BOTTOM OF ALL OVERHEAD CABLE TRAY ASSEMBLIES AND 12" FROM THE TOP OF ALL CABLE TRAY ASSEMBLIES TO THE FACILITY FINISHED CEILING, UNLESS OTHERWISE NOTED.
29. AUDIOVISUAL SYSTEM RACKS AND CABINETS SHALL HAVE A MINIMUM OF 36" UNOBSTRUCTED CLEAR SPACE FOR ACCESS IN FRONT AND REAR. WALL MOUNTED AUDIOVISUAL SYSTEM RACK AND CABINET ASSEMBLIES REQUIRE FRONT ACCESS ONLY, UNLESS OTHERWISE NOTED.

GENERAL NOTES (CONT'D)

30. THE CONTRACTOR SHALL PROVIDE A SERVICE LOOP NO LESS THAN 10'-0" AT ALL AUDIOVISUAL SYSTEMS RACK LOCATIONS AND NO LESS THAN 3'-0" AT ALL AUDIOVISUAL SYSTEMS PULL AND BREAKOUT BOXES, UNLESS OTHERWISE NOTED.
31. ALL AUDIOVISUAL SYSTEMS MOUNTING HEIGHTS ARE BY THE INTERIOR DESIGNER OR ARCHITECT. HEIGHT VALUES SHOWN IN THIS DOCUMENT ARE MEANT FOR COORDINATION PURPOSES ONLY.
32. ALL AUDIOVISUAL SYSTEM DEVICE PLATE FINISHES AND TYPES ARE TO BE VERIFIED IN WRITING BY THE AUDIOVISUAL CONTRACTOR WITH THE ARCHITECT AND/OR INTERIOR DESIGNER.
33. J-HOOKS SHALL BE LOCATED AT A MAXIMUM OF 5'-0" INTERVALS TO SUPPORT CABLE WEIGHT, AND BE INSTALLED WITH AT LEAST 6" OF CLEAR VERTICAL SPACE ABOVE THE CEILING TO ENSURE ACCESSIBILITY.
34. HORIZONTAL PATHWAYS AND CABLES SHALL NEVER REST DIRECTLY ON OR BE SUPPORTED BY COMPONENTS OF A SUSPENDED CEILING, AIR DUCTING, WATER OR ELECTRICAL PIPING, LIGHTING, OR ANY OTHER BUILDING ELEMENT NOT SPECIFICALLY INTENDED FOR LOW VOLTAGE CABLING.
35. LOW VOLTAGE GROUNDING SYSTEM SHALL CONFROM THE THE TIA 607 STANDARD.
36. CONTRACTOR SHALL PROVIDE LISTED FIRESTOPPING FOR ALL TELECOM/LOW VOLTAGE CONDUITS AND CABLES, REFER TO SPECIFICATION.
37. ALL CABLING SHALL BE INSTALLED IN LISTED METALLIC RACEWAYS. EMT FITTINGS SHALL BE MALLEABLE IRON OR STEEL. CONNECTORS SHALL BE INSULATED THROAT TYPE.
38. ALL TELEPHONE TERMINAL BACKBOARDS SHALL BE 3/4" x 8'-0" (H) VOID FREE FIRE RETARDANT AC PLYWOOD.
39. CONDUIT/PATHWAY ROUTING INDICATED ON DRAWINGS IS FOR GENERAL REFERENCE ONLY. CONTRACTOR SHALL FIELD COORDINATE AND VERIFY EXACT ROUTING AS REQUIRED.
40. TELECOMMUNICATIONS CONTRACTOR SHALL COORDINATE WITH ELECTRICAL CONTRACTOR TO ENSURE CONDUIT ROUTING FOR TELEPHONE AND DATA DOES NOT RESULT IN CABLE LENGTHS IN EXCESS OF 295 FEET.
41. CONDUIT GREATER THAN 1-1/4" WILL REQUIRE A JUNCTION BOX SIZED PER THE NEC.
42. UNLESS SPECIFICALLY INDICATED OTHERWISE, CONDUIT SHALL NOT EXTEND FROM TR TO MORE THAN THREE OUTLET BOXES.
43. INSTALLATION SHALL BE PERFORMED IN A WORKMANLIKE MANNER TO THE SATISFACTION OF THE ARCHITECT.
44. CONTRACTOR SHALL REFER TO SPECIFICATION FOR ADDITIONAL PROJECT REQUIREMENTS. SPECIFICATIONS SUPERSEDE DRAWING INFORMATION.
45. WORK, MATERIAL AND EQUIPMENT SHALL CONFORM TO THE LATEST EDITIONS OF LOCAL, STATE AND NATIONAL CODES AND ORDINANCES.
46. ALL LOW VOLTAGE SYSTEMS COMPONENTS SHALL BE LISTED OR LABELED BY UL OR OTHER RECOGNIZED TESTING FACILITY.
47. ALL CABLING SHALL BE COMPLETE, OPERABLE, TESTED (END TO END) IN ACCORDANCE WITH THE APPLICABLE TIA/EIA STANDARDS FOR THE SPECIFIC MEDIA INVOLVED.
48. COORDINATE WITH ARCHITECT AND INTERIOR DESIGN FOR EXACT LOCATION, ELEVATION AND COLOR REQUIREMENTS OF OUTLETS/FACEPLATES.

PRELIMINARY DRAWING
FOR REVIEW ONLY - NOT FOR CONSTRUCTION

INCHES 1 2
CENTIMETERS 1 2 3 4 5 6

NATIONAL SCIENCE FOUNDATION
OFFICE OF POLAR PROGRAMS
WASHINGTON, D.C. NSF
CONTRACT OPP: 0000373

REVISION LOG

REV.	DATE	DESCRIPTION	DFTG.	APPD.
A	09/23/2016	30% DESIGN SUBMITTAL		

MCMURDO STATION
BL 010: IT&C PRIMARY OPS FACILITY
TELECOM

7400 South Tucson Way
Centennial, Colorado
80112 - 3938 USA
303 - 790 - 8606
800 - 688 - 8606
ASC ANTARCTIC SUPPORT CONTRACT

PROJECT NUMBER: 160604MCM010
FILE NAME: 160604MCM010T-001-RA
DESIGNED BY: LLM
DRAWN BY: BRT
DATE CHECKED: 9/23/16
SHEET TITLE: GENERAL NOTES
SHEET NUMBER: T-001

ABBREVIATIONS - COMMUNICATIONS

ADA	AMERICANS WITH DISABILITIES ACT
AFC	ABOVE FINISHED CEILING
AFF	ABOVE FINISHED FLOOR
AIA	AMERICAN INSTITUTE OF ARCHITECTS
ANMW	GEL-FILLED UNDERGROUND CABLE
ANSI	AMERICAN NATIONAL STANDARDS INSTITUTE
AL	ALUMINUM
AP	ACCESS POINT
APC	ANGLED POLISHED CONNECTOR
ARF	ABOVE RAISED FLOOR
ARMM	AIR-FILLED UTP RISER CABLE
ASP	ALUMINUM STEEL POLYETHYLENE
ASTM	AMERICAN SOCIETY FOR TESTING AND MATERIALS
AV	AUDIO VISUAL
AWG	AMERICAN WIRE GAUGE
BAS	BUILDING AUTOMATION SYSTEM
BC	BARE COPPER
BCR	BUILDING COMMUNICATIONS ROOM
BICSI	BUILDING INDUSTRY CONSULTING SERVICES INTERNATIONAL
BLDG	BUILDING
BOC	BOTTOM OF CONDUIT
BOM	BILL OF MATERIALS
BOT	BOTTOM OF TRAY
BOW	BOTTOM OF WIREWAY
C	CONDUIT
CATV	COMMUNITY ANTENNA TELEVISION
CB	CIRCUIT BREAKER
CC	CONTROL CABLE
CCTV	CLOSED CIRCUIT TELEVISION
CFCI	CONTRACTOR FURNISHED, CONTRACTOR INSTALLED
CFOI	CONTRACTOR FURNISHED, OWNER INSTALLED
CIM	COMMUNICATIONS INTERFACE MODULE
CKT	CIRCUIT
CLG	CEILING
CONC	CONCRETE
CONT	CONTINOUS
COORD	COORDINATE
CMP	COMMUNICATIONS PLENUM
CMU	CONCRETE MASONARY UNIT
CP	CONSOLIDATION POINT
CR	COMPUTER ROOM
CRS	COATED RIGID STEEL CONDUIT
D	DISPLAY BOARD (SIGN)
DAS	DISTRIBUTED ANTENNA SYSTEM
dB	DECIBEL
DBS	DIGITAL BROADCAST SYSTEM
DDC	DIRECT DIGITAL CONTROL
DIA	DIAMETER
DIM	DIMENSION
DIV	DIVISION
DN	DOWN
DTE	DATA TERMINAL EQUIPMENT
DTL	DETAIL
DWG	DRAWING
EA	EACH
EC	ELECTRICAL CONTRACTOR
EF	ENTRANCE FACILITY
EL, ELEV	ELEVATION
ELEC	ELECTRIC
EM	EMERGENCY
EMC	ELECTROMAGNETIC COMPATIBILITY
EMI	ELECTROMAGNETIC INTERFERENCE
EMT	ELECTRICAL METALLIC TUBING
ENET	ETHERNET NETWORK
ENT	ELECTRICAL NON-METALLIC TUBING
EPMS	ELECTRICAL POWER MONITORING SYSTEM
ER	EQUIPMENT ROOM
EQ	EQUAL
(E), EX	EXISTING
(F)	FUTURE
FA	FIRE ALARM
FBO	FURNISHED BY OTHERS
FCS	FACILITY CONTROL SYSTEM
FDR	FEEDER
FDU	FIBER OPTIC DISTRIBUTION UNIT
FLEX	FLEXIBLE NONMETALLIC CONDUIT
FLR	FLOOR

ABBREVIATIONS - COMMUNICATIONS

FMS	FACILITY MANAGEMENT SYSTEMS
FO	FIBER OPTIC
FPD	FLAT PANEL DISPLAY
FT	FOOT/FEET
G,GND	GROUND
GALV	GALVANIZED
GHZ	GIGAHERTZ
H	HORN
HAC	HOT AISLE CONTAINMENT
HC	HORIZONTAL CROSS-CONNECT
HDMI	HIGH DEFINITION MULTIMEDIA INTERFACE
HDTV	HIGH DEFINITION TELEVISION
HH	HANDHOLE
HORZ	HORIZONTAL
HMI	HUMAN MACHINE INTERFACE
HT	HEIGHT
HV	HIGH VOLTAGE
HVAC	HEATING, VENTILATING & AIR CONDITIONING
I/O	INPUT/OUTPUT
I&C	INSTRUMENTATION AND CONTROL
IAW	IN ACCORDANCE WITH
IC	INTERMEDIATE CROSS-CONNECT
ICOM	INTERCOM
ID	INSIDE DIAMETER
IDF	INTERMEDIATE DISTRIBUTION FRAME
IEEE	INSTITUTE OF ELECTRICAL AND ELECTRONICS ENGINEERS
IMC	INTERMEDIATE METALLIC CONDUIT
IN	INCH/INCHES
ISDN	INTEGRATED SERVICES DIGITAL NETWORK
ISO	INTERNATIONAL STANDARDS ORGANIZATION
IT	INFORMATION TECHNOLOGIES
LAN	LOCAL AREA NETWORK
LED	LIGHT EMITTING DIODE
LMC	LIQUIDTIGHT FLEXIBLE METAL CONDUIT
LNC	LIQUIDTIGHT FLEXIBLE NONMETALLIC CONDUIT
LV	LOW VOLTAGE
LSS	LIFE SAFETY SYSTEMS
MATL	MATERIAL
MAU	MULTISTATION ACCESS UNIT
MAX	MAXIMUM
MC	MAIN CROSS-CONNECT
MCR	MAIN COMMUNICATIONS ROOM
MECH	MECHANICAL
MEZZ	MEZZANINE
MFR	MANUFACTURER
MH	MAINTENANCE HOLE
MHz	MEGAHERTZ
MIC	MICROPHONE
MIN	MINIMUM
MISC	MISCELLANEOUS
MM	MULTIMODE OPTICAL FIBER
MON	MONITOR
MPEG	MOVING PICTURES EXPERT GROUP STANDARD
MPO, MPT	TYPE OF FIBER OPTIC CONNECTOR
MT, MTD	MOUNT, MOUNTED
MTL	METAL
(N)	NEW
NA	NOT APPLICABLE
NC	NO CONNECTION
NEC	NATIONAL ELECTRIC CODE
NEMA	NATIONAL ELECTRICAL MANUFACTURERS' ASSOCIATION
NEXT	NEAR END CROSS TALK
NFPA	NATIONAL FIRE PROTECTION ASSOCIATION
NIC	NOT IN CONTRACT
NIP	NOT IN PROJECT
NP	NAMEPLATE
NTS	NOT TO SCALE
NTSC	NATIONAL TELEVISION SYSTEMS COMMITTEE VIDEO STANDARD
OC	ON CENTER
OD	OUTSIDE DIAMETER
OFCI	OWNER FURNISHED, CONTRACTOR INSTALLED
OFCP	OPTIC FIBER CONDUCTIVE PLENUM
OFCR	OPTIC FIBER CONDUCTIVE RISER
OFE	OWNER FURNISHED EQUIPMENT
OFNR	OPTIC FIBER NONCONDUCTIVE RISER

ABBREVIATIONS - COMMUNICATIONS

OFCI	OWNER FURNISHED, CONTRACTOR INSTALLED
OFOI	OWNER FURNISHED, OWNER INSTALLED
OIT	OPERATOR INTERFACE TERMINAL
OM3	OPTICAL MULTIMODE FIBER GRADE 3
OM4	OPTICAL MULTIMODE FIBER GRADE 4
OS2	OPTICAL SINGLEMODE FIBER GRADE 2
OSP	OUTSIDE PLANT
OTDR	OPTICAL TIME DOMAIN REFLECTOMETER
PA	PUBLIC ADDRESS SYSTEM, AUDIO POWER AMPLIFIER
PABX	PRIVATE AUTOMATIC BRANCH EXCHANGE
P/N	PART NUMBER
PB	PULL BOX
PBX	PRIVATE BRANCH EXCHANGE
PGM	PROGRAM
PLC	PROGRAMMABLE LOGIC CONTROLLER
POTS	PLAIN OLD TELEPHONE SERVICE
PM	PROJECT MANAGER
PNL	PANEL
POS	POINT OF SALES
PR	PAIR
PSI	POUNDS PER SQUARE INCH
PVC	POLYVINYL CHLORIDE
QTY	QUANTITY
R	RISER
(R)	RELOCATE
RCPT	RECEPTACLE
REF	REFERENCE
REQD	REQUIRED
RF	RADIO FREQUENCY
RFI	REQUEST FOR INFORMATION
RGBHV	RED, GREEN, BLUE, HORIZONTAL, VERTICAL SIGNAL
RGS	RIGID GALVANIZED STEEL
RH	RELATIVE HUMIDITY
RM	ROOM
RU	RACK UNIT(S)
S	SPEAKER
SATV	SATELLITE TELEVISION
SC	TYPE OF FIBER OPTIC CONNECTOR
SCC	SATELLITE COMMUNICATIONS CABINET
SCH	SCHEDULE
SCP	SECURITY CONTROL PANEL
SCR	SATELLITE COMMUNICATIONS ROOM
SDC	SERVICES DURING CONSTRUCTION
SDI	SERIAL DIGITAL INTERFACE
SE	STATION EQUIPMENT
SECT	SECTION
SEG	SEGMENT
SHT	SHEET
SIB	STRUCTURAL ISOLATION BREAK
SIM	SIMILAR
SM	SINGLE MODE OPTICAL FIBER
SMATV	SATELLITE MASTER ANTENNA TELEVISION
SMPTE	SOCIETY OF MOTION PICTURE AND TELEVISION ENGINEERS
SPEC	SPECIFICATION
SRL	SIGNAL RETURN LOSS
SS	STAINLESS STEEL
ST	TYPE OF FIBER OPTIC CONNECTOR
STD	STANDARD
STL	STEEL
STP	SHIELDED TWISTED PAIR
STRUCT	STRUCTURAL
SUR	SURFACE
SW	SWITCH
SYM	SYMMETRICAL
TB	TERMINAL BLOCK
TC	TELECOMMUNICATIONS CLOSET
TBD	TO BE DETERMINED
TGB	TELECOMMUNICATIONS GROUNDING BUSBAR
TIA	TELECOMMUNICATIONS INDUSTRY ASSOCIATION
TMGB	TELECOMMUNICATIONS MAIN GROUNDING BUSBAR
TO	TELECOMMUNICATIONS OUTLET
TP	TRANSITION POINT
TR	TELECOMMUNICATIONS ROOM
TV	TELEVISION
TYP	TYPICAL
UHF	ULTRA HIGH FREQUENCY

ABBREVIATIONS - COMMUNICATIONS

UL	UNDERWRITERS' LABORATORIES, INC.
UNO	UNLESS NOTED OTHERWISE
UPS	UNINTERRUPTABLE POWER SUPPLY
UTP	UNSHIELDED TWISTED PAIR
UTP3	CATEGORY 3, 4 PR UTP NONPLENUM CABLE or CATEGORY 3, 4 PR UTP CABLE
UTP3P	CATEGORY 3, 4 PR UTP PLENUM CABLE
UTP5E	CATEGORY 5, 4 PR ENHANCED UTP NONPLENUM CABLE or CATEGORY 5E, 4 PR UTP CABLE
UTP5EP	CATEGORY 5, 4 PR ENHANCED UTP PLENUM CABLE
UTP6	CATEGORY 6, 4 PR UTP NONPLENUM CABLE or CATEGORY 6, 4 PR ENHANCED UTP CABLE
UTP6P	CATEGORY 6, 4 PR UTP PLENUM CABLE
VCT	VINYL COMPOSITION TILE
VGA	VIDEO GRAPHICS ARRAY
VP	VAPORPROOF
W	WALL PHONE
WW	WIDE/WIDTH
W/	WITH
W/O	WITHOUT
WA	WORK AREA
WAN	WIDE AREA NETWORK
WAP	WIRELESS ACCESS POINT
WLAN	WIRELESS LOCAL AREA NETWORK
WM	WIRE MANAGER
WP	WEATHERPROOF (NEMA 3R)
WT	WEIGHT
8.3/250-OFNR	SINGLE-MODE, GEL-FILLED LOOSE TYPE, FIBER OPTIC CABLE FOR INDOOR AND OUTDOOR APPLICATIONS, OFNR RATED
8.3/900	SINGLE-MODE, TIGHT BUFFERED, FIBER OPTIC CABLE FOR BUILDING INSTALLATION
50/250	MULTIMODE, GEL-FILLED LOOSE TUBE, FINBER OPTIC CABLE FOR UNDERGROUND CONDUIT INSTALLATION
50/250-OFNR	MULTIMODE, GEL-FILLED LOOSE TUBE, FIBER OPTIC CABLE FOR INDOOR AND OUTDOOR APPLICATIONS, OFNR RATED
50/900	MULTIMODE, TIGHT BUFFERED, FIBER OPTIC CABLE FOR INDOOR/OUTDOOR INSTALLATION
50/900-OFNR	MULTIMODE, TIGHT BUFFERED, FIBER OPTIC CABLE, OFNR RATED
50/900P	MULTIMODE, TIGHT BUFFERED PLENUM FIBER OPTIC CABLE FOR INDOOR/OUTDOOR INSTALLATION
50/900-OFCR	MULTIMODE, TIGHT BUFFERED, FIBER OPTIC CABLE, WITH SPIRAL WOUND INTERLOCKING ALUMINUM ARMOR - OFCR RATED
62.5/250	MULTIMODE, GEL-FILLED LOOSE TUBE, FIBER OPTIC CABLE FOR UNDERGROUND CONDUIT INSTALLATION
62.5/900	MULTIMODE, TIGHT BUFFERED, FIBER OPTIC CABLE FOR INDOOR/OUTDOOR INSTALLATION
62.5/900P	MULTIMODE, TIGHT BUFFERED, PLENUM FIBER OPTIC CABLE FOR INDOOR/OUTDOOR INSTALLATION

FOR REFERENCE. NOT ALL ABBREVIATIONS ARE USED.

PRELIMINARY DRAWING
FOR REVIEW ONLY - NOT FOR CONSTRUCTION

INCHES 1 2
CENTIMETERS 1 2 3 4 5 6

NATIONAL SCIENCE FOUNDATION
OFFICE OF POLAR PROGRAMS
WASHINGTON, D.C. NSF
CONTRACT OPP: 0000373

REVISION LOG

REV.	DATE	DESCRIPTION	DFTG.	APPD.
A	09/23/2016	30% DESIGN SUBMITTAL		

MCMURDO STATION
BL 010: IT&C PRIMARY OPS FACILITY
TELECOM

7400 South Tucson Way
Centennial, Colorado
80112 - 3938 USA
303 - 790 - 8606
800 - 688 - 8606

ASC ANTARCTIC SUPPORT CONTRACT

PROJECT NUMBER: 160604MCM010
FILE NAME: 160604MCM010T-002-RA
DESIGNED BY: LLM
DRAWN BY: BRT
DATE CHECKED: 9/23/16
SHEET TITLE: ABBREVIATIONS
SHEET NUMBER: T-002

1 2 3 4 5 6 7 8
D C B A

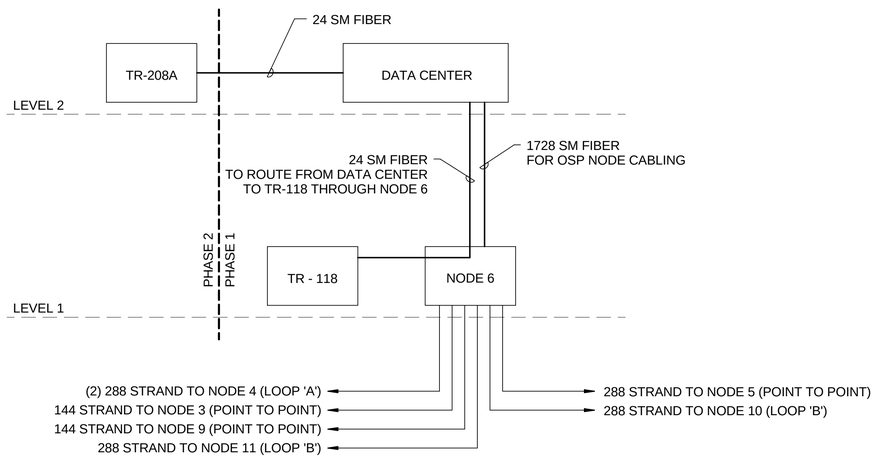

1 TELECOM RISER DIAGRAM

NONE

PRELIMINARY DRAWING

FOR REVIEW ONLY - NOT FOR CONSTRUCTION

INCHES 1 2

CENTIMETERS 1 2 3 4 5 6

NATIONAL SCIENCE FOUNDATION

OFFICE OF POLAR PROGRAMS
WASHINGTON, D.C. NSF
CONTRACT OPP. 0000373

REVISION LOG

REV.	DATE	DESCRIPTION	DFTG.	APPD.
A	09/23/2016	30% DESIGN SUBMITTAL		

MCMURDO STATION
BL 010: IT&C PRIMARY OPS FACILITY

TELECOM

7400 South Tucson Way
Centennial, Colorado
80112 - 3938 USA
303 - 790 - 8606
800 - 688 - 8606

ASC ANTARCTIC SUPPORT CONTRACT

PROJECT NUMBER: 160604MCM010

FILE NAME: 160604MCM010T-200-RA

DESIGNED BY: LLM

DRAWN BY: BRT

DATE CHECKED: 9/23/16

SHEET TITLE: TELECOM RISER DIAGRAM

SHEET NUMBER: T-200

1 2 3 4 5 6 7 8

A B C D

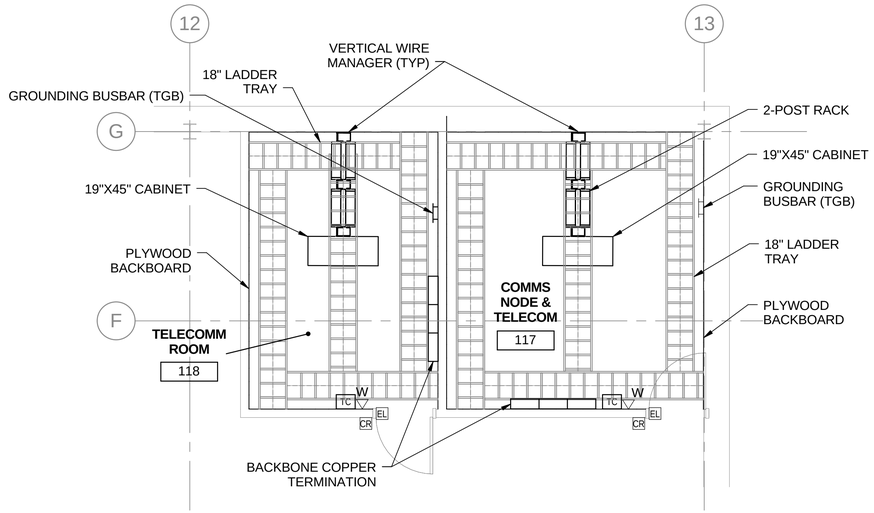

1 LEVEL 1 - ENLARGED TELECOM & NODE PLANS

1/4" = 1'-0"

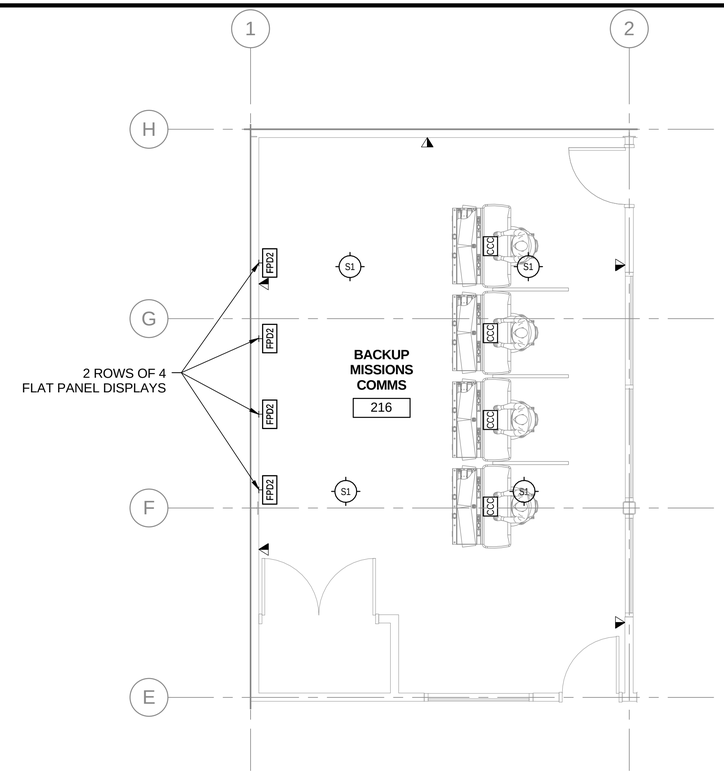

2 LEVEL 2 - ENLARGED BACKUP MISSION COMMS PLAN

1/4" = 1'-0"

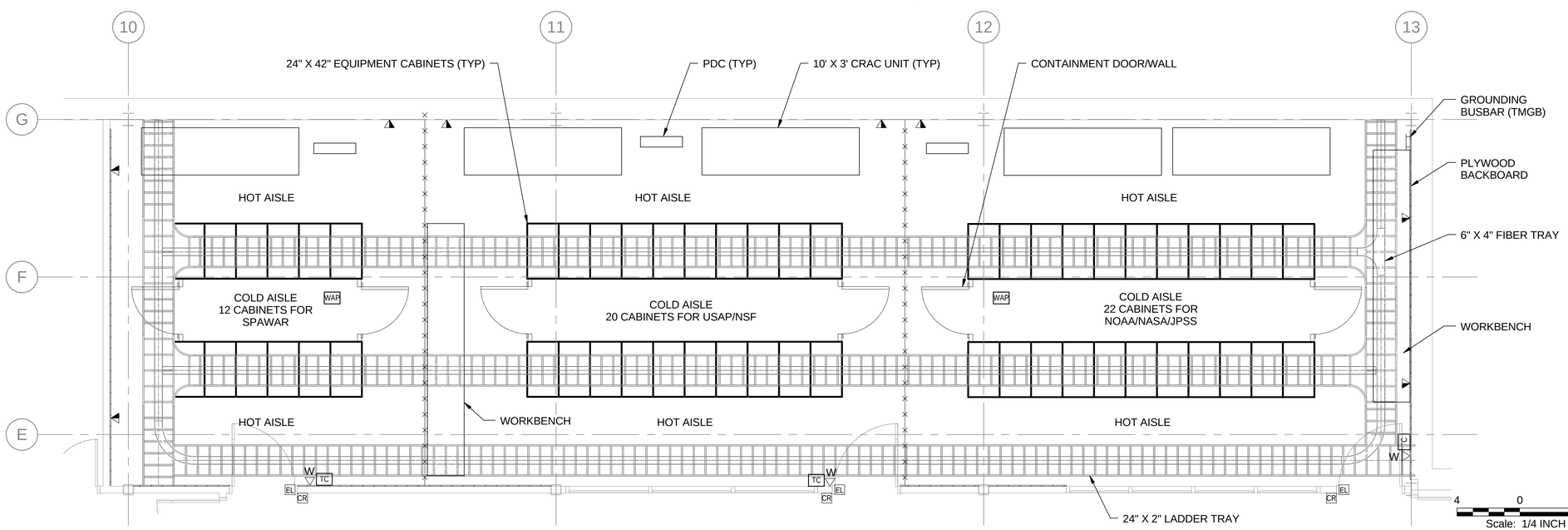

3 LEVEL 2 - ENLARGED DATA CENTER PLAN

1/4" = 1'-0"

Scale: 1/4 INCH = 1 FOOT

PRELIMINARY DRAWING
FOR REVIEW ONLY - NOT FOR CONSTRUCTION

INCHES 1 2
CENTIMETERS 1 2 3 4 5 6

NATIONAL SCIENCE FOUNDATION
OFFICE OF POLAR PROGRAMS
WASHINGTON, D.C. NSF
CONTRACT OPP. 0000373

REVISION LOG

REV.	DATE	DESCRIPTION	DFTG.	APPD.
A	09/23/2016	30% DESIGN SUBMITTAL		

MCMURDO STATION
BL 010: IT&C PRIMARY OPS FACILITY
TELECOM

7400 South Tucson Way
Centennial, Colorado
80112 - 3938 USA
303 - 790 - 8606
800 - 688 - 8606
ASC ANTARCTIC SUPPORT CONTRACT

PROJECT NUMBER: 160604MCM010
FILE NAME: 160604MCM010T-401-RA
DESIGNED BY: LLM
DRAWN BY: BRT
DATE CHECKED: 9/23/16
SHEET TITLE: ENLARGED TELECOM PLANS
SHEET NUMBER: T-401